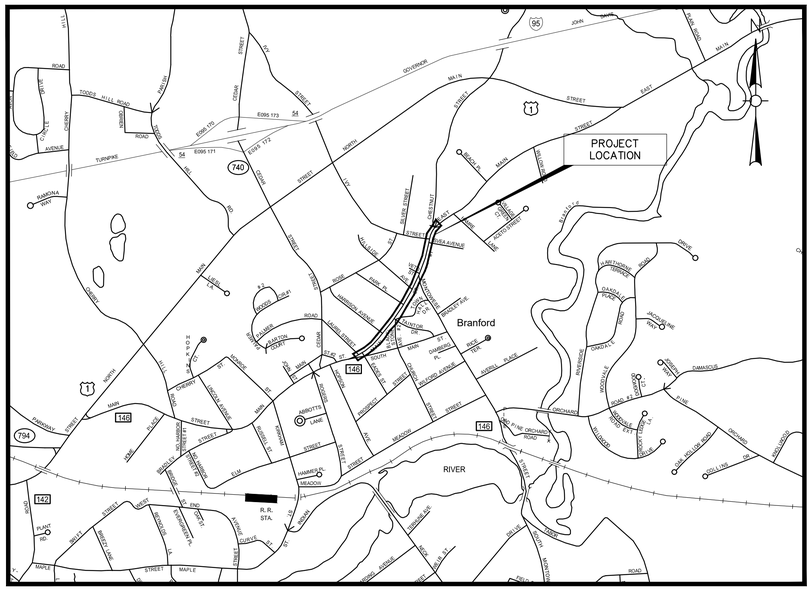

LOCATION MAP
SCALE: 1" = 1000'

TOWN OF BRANFORD MAIN STREET RECONSTRUCTION AND REHABILITATION PROJECT NO. L014-0002

BID SET
DECEMBER 13, 2024

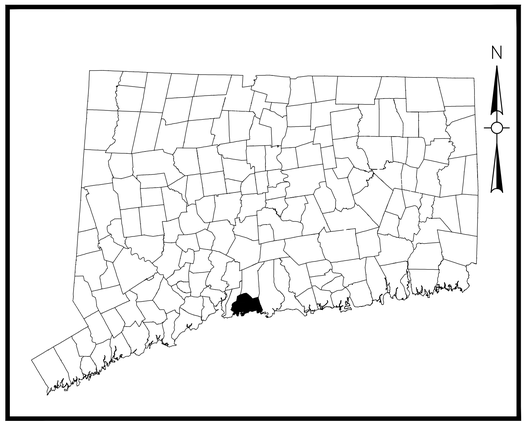

TOWN LOCATION

PROJECT SPECIFICATIONS:
STATE OF CONNECTICUT DEPARTMENT OF TRANSPORTATION STANDARD SPECIFICATIONS FOR ROADS, BRIDGES, FACILITIES AND INCIDENTAL CONSTRUCTION FORM 819 (2024), MERGED WITH ALL ADDENDUMS FROM SPECIAL PROVISIONS

SURVEY INFORMATION:
TOPOGRAPHIC FIELD SURVEY PERFORMED BY PEREIRA ENGINEERING, LLC. MAY 2023, SEE SURVEY NOTES ON SHEET GEN-1

VERTICAL DATUM - NAVD88
HORIZONTAL DATUM - NAD83

CONTENTS

SHEET NAME	SHEET TITLE
TITLE	TOWN OF BRANFORD MAIN STREET RECONSTRUCTION AND REHABILITATION
GEN-1	NOTES, LEGENDS, ABBREVIATIONS AND INDEX PLAN
BOR-1 TO BOR-2	BORING LOGS
EX-1 TO EX-4	EXISTING CONDITIONS PLANS
DET-1	SEDIMENT AND EROSION CONTROL DETAILS
DET-2	MISCELLANEOUS DETAILS
DET-3 TO DET-5	CT DOT HIGHWAY GUIDE SHEETS
DET-6 TO DET-11	CT DOT TRAFFIC GUIDE SHEETS
DET-12 TO DET-22	LANDSCAPE DETAILS
TYP-1	TYPICAL SECTION
IGP-1 TO IGP-2	INTERSECTION GRADING PLANS
HWY-1	ROADWAY PLAN AND PROFILE - MAIN STREET STA. 10+90 TO STA. 16+75
HWY-2	ROADWAY PLAN AND PROFILE - MAIN STREET STA. 16+75 TO STA. 22+75
HWY-3	ROADWAY PLAN - MAIN STREET STA. 22+75 TO STA. 28+75
HWY-4	ROADWAY PROFILE - MAIN STREET STA. 22+75 TO STA. 28+75
HWY-5	ROADWAY PLAN AND PROFILE - MAIN STREET STA. 28+75 TO STA. 34+40
SPM-1 TO SPM-2	SIGNING AND PAVEMENT MARKING PLANS
LA-1 TO LA-4	LANDSCAPE IMPROVEMENTS PLANS
LP-1 TO LP-4	PLANTING PLANS
XSC-1 TO XSC-31	CROSS SECTIONS
TCS-1 TO TCS-2	TRAFFIC CONTROL SIGNAL PLANS
EL-1 TO EL-4	ELECTRICAL PLANS
EL-5 TO EL-6	ELECTRICAL DETAILS
	CT DOT HIGHWAY STANDARD DRAWINGS
	CT DOT TRAFFIC STANDARD DRAWINGS

JAMES B. COSGROVE
FIRST SELECTMAN

JOHN M. HOEFFERLE, P.E.
TOWN ENGINEER

MAIN STREET (STA. 10+90 TO 34+40)
MAIN STREET AND ALL SIDE STREETS WITHIN THE PROJECT LIMITS ARE TO BE MAINTAINED BY THE TOWN OF BRANFORD

PLANS APPROVED BY: _____

TOWN OF BRANFORD - TOWN ENGINEER OR CHIEF ELECTED OFFICIAL

Know what's below. Call before you dig.

DESIGNED BY:
WESTON & SAMPSON ENGINEERS, INC.
712 BROOK STREET, SUITE 103
ROCKY HILL, CT 06067

CT LIC. NO. 30580

Weston & Sampson

712 Brook Street, Suite 103, Rocky Hill, CT 06067
860.513.1473 800.SAMPSON
www.westonandsampson.com

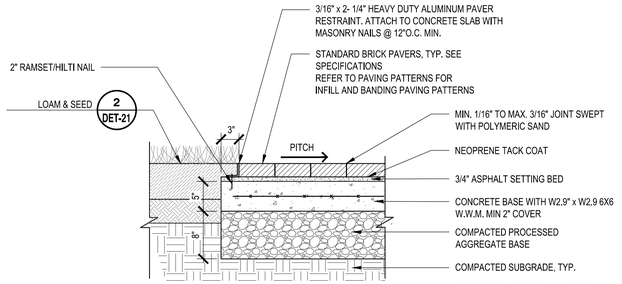

1A - AT LAWN CONDITION

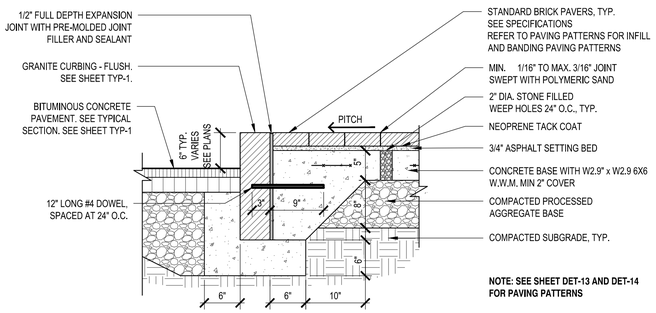

1B - AT CURB CONDITION

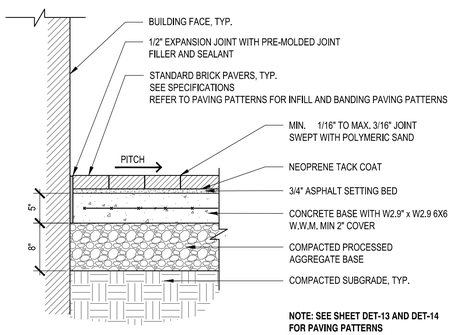

1C - AT BUILDING CONDITION

1 BRICK PAVERS ON CONCRETE - PEDESTRIAN

NOT TO SCALE CT-BR-33

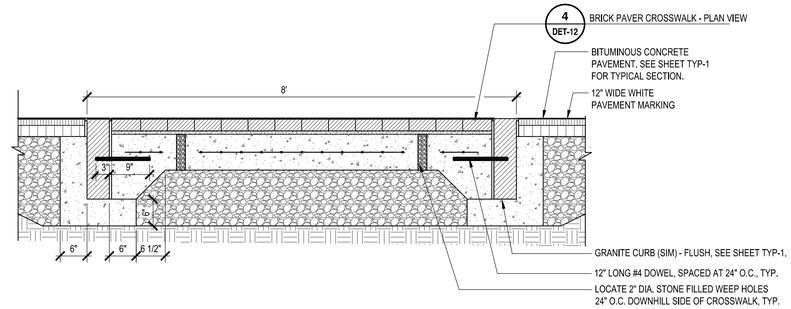

SECTION VIEW

3 BRICK PAVERS CROSSWALK - SECTION VIEW

NOT TO SCALE CT-BR-50

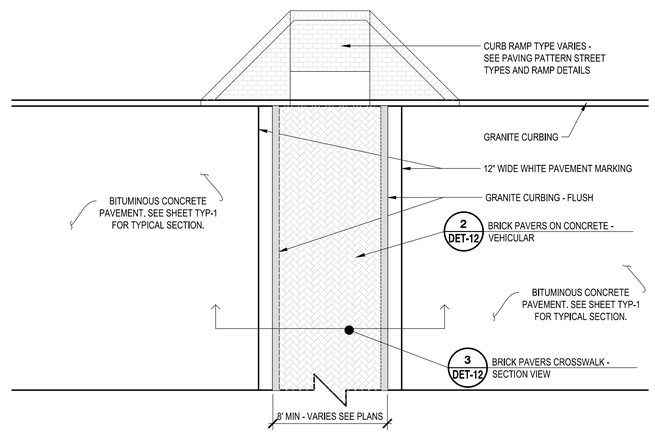

PLAN VIEW

4 BRICK PAVER CROSSWALK - PLAN VIEW

NOT TO SCALE CT-BR-52

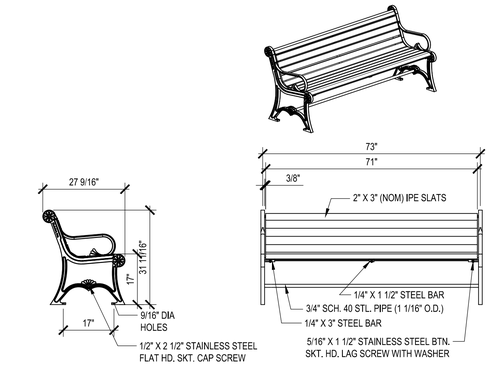

NOTES:
1. BENCH MANUFACTURED BY DUMOR, INC, MODEL 57 SERIES, 57-60I OR APPROVED EQUAL.
2. FINISH:
   WOOD SLATS: IPE
   STEEL: COATED WITH ZINC RICH EPOXY THEN FINISHED WITH POLYESTER POWDER COAT
   COLOR: JUNIPER GREEN.
3. SIZE: 6' L
4. MOUNTING: SURFACE MOUNT. SEE DETAIL 9/DET-12.

7 BENCH

NOT TO SCALE CT-BR-48

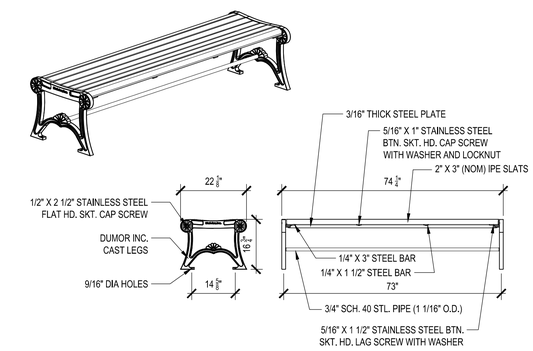

NOTES:
1. BENCH MANUFACTURED BY DUMOR, INC, MODEL 91 SERIES, 91-60I OR APPROVED EQUAL.
2. FINISH:
   WOOD SLATS: IPE
   STEEL: COATED WITH ZINC RICH EPOXY THEN FINISHED WITH POLYESTER POWDER COAT
   COLOR: JUNIPER GREEN.
3. SIZE: 6' L
4. MOUNTING: SURFACE MOUNT. SEE DETAIL 9/DET-12.

8 BACKLESS BENCH

NOT TO SCALE CT-BR-92

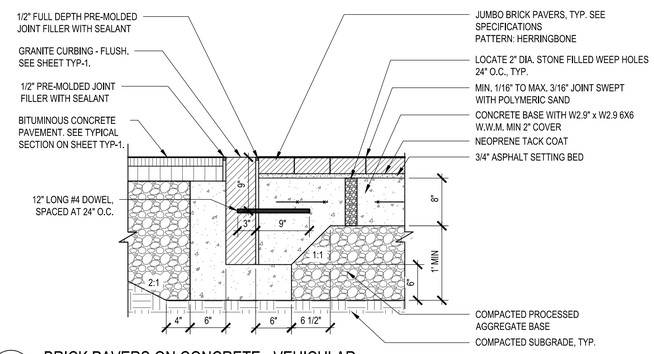

2 BRICK PAVERS ON CONCRETE - VEHICULAR

NOT TO SCALE CT-BR-51

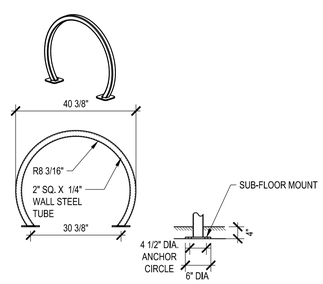

NOTES
1. BIKE RACK MANUFACTURED BY DUMOR INC, MODEL293-00/ S-4 OR APPROVED EQUAL
2. FINISH COATED WITH ZINC RICH EPOXY THEN FINISHED WITH POLYESTER POWDER COAT.
   COLOR: TO BE JUNIPER GREEN. SUBMIT COLOR CHIPS FOR COLOR VERIFICATION AND APPROVAL.
   COLOR: JUNIPER GREEN
   MOUNTING: SUB-FLOOR MOUNT (S-4)

5 BIKE RACK

NOT TO SCALE CT-BR-49

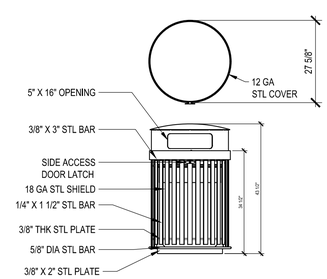

NOTES:
1. TRASH RECEPTACLE ASSEMBLY WITH SHIELD AND SIDE DEPOSIT BY DUMOR MODEL 287-32SH SO
2. SIZE: 32 GALLON
3. MOUNTING: FREE STANDING
4. LID OPTION: SO
5. FINISH: ALL STEEL MEMBERS COATED W/ ZINC RICH EPOXY THEN FINISHED W/ POLYESTER POWDER COATING.
6. COLOR: JUNIPER GREEN.

6 TRASH RECEPTACLE

NOT TO SCALE CT-BR-47

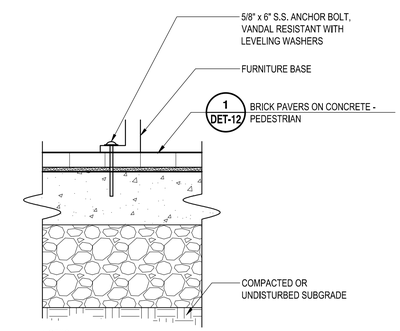

NOTES:
1. ALL SITE FURNISHINGS SHALL BE SURFACE MOUNTED PER MANUFACTURER'S RECOMMENDATIONS.

9 SURFACE MOUNT WITH UNIT PAVERS

NOT TO SCALE CT-BR-110

Project:

TOWN OF BRANFORD

MAIN STREET RECONSTRUCTION AND REHABILITATION
PROJECT NO.: L014-0002

1019 MAIN STREET
BRANFORD, CT 06405

Weston & Sampson

Weston & Sampson Engineers, Inc.
712 Brook Street, Suite 103
Rocky Hill, CT 06067
860.513.1473 800.SAMPSON
www.westonandsampson.com

Consultants:

Revisions:

No.	Date	Description

Seal:

COA:

Issued For:

BID SET

Scale:	AS NOTED
Date:	DECEMBER 13, 2024
Drawn By:	JT, JC
Reviewed By:	RC
Approved By:	MJJ
W&S Project No.:	ENG21-0163
W&S File No.:	

Drawing Title:

LANDSCAPE DETAILS

Sheet Number:

DET-12

COPYRIGHT 2024 WESTON & SAMPSON

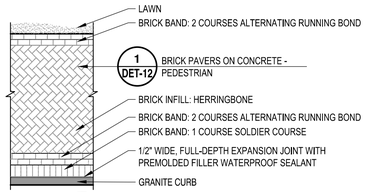

GENERAL PAVEMENT LAYOUT:

1. BRICK BANDS 1 & 2 TO BE LAID OUT TO A FULL COURSE BRICK; TYPICAL AT ALL LOCATIONS.

1 BRICK PAVER TYPICAL LAYOUT ENLARGEMENT

NOT TO SCALE — CT-BR-112

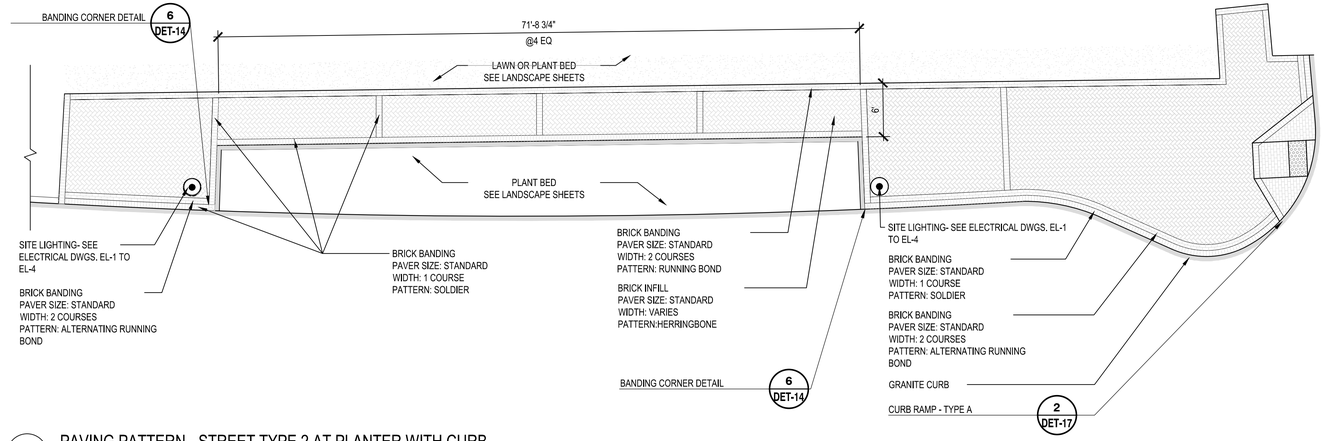

4 PAVING PATTERN - STREET TYPE 2 AT PLANTER WITH CURB

NOT TO SCALE — CT-BR-88

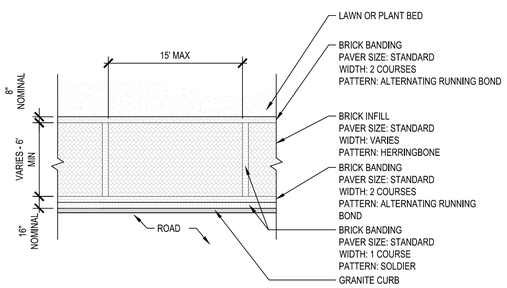

2 PAVING PATTERN - STREET TYPE 1 (6'+ WIDE WALK)

NOT TO SCALE — CT-BR-77

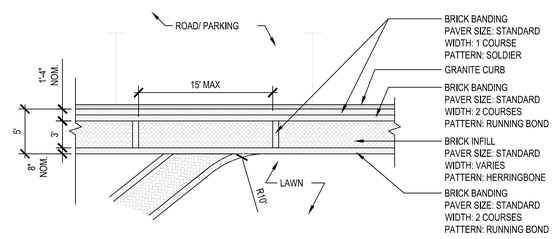

5 PAVING PATTERN - STREET TYPE 3

NOT TO SCALE — CT-BR-79

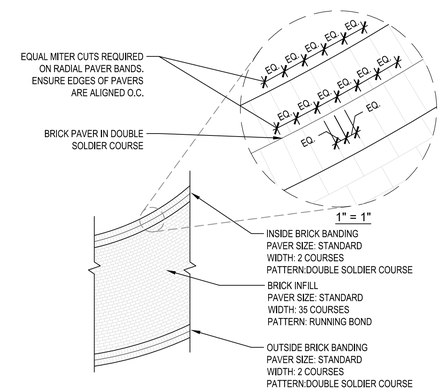

6 PAVING PATTERN - STREET TYPE 5 (MONTOWESE CIRCLE)

NOT TO SCALE — CT-BR-84

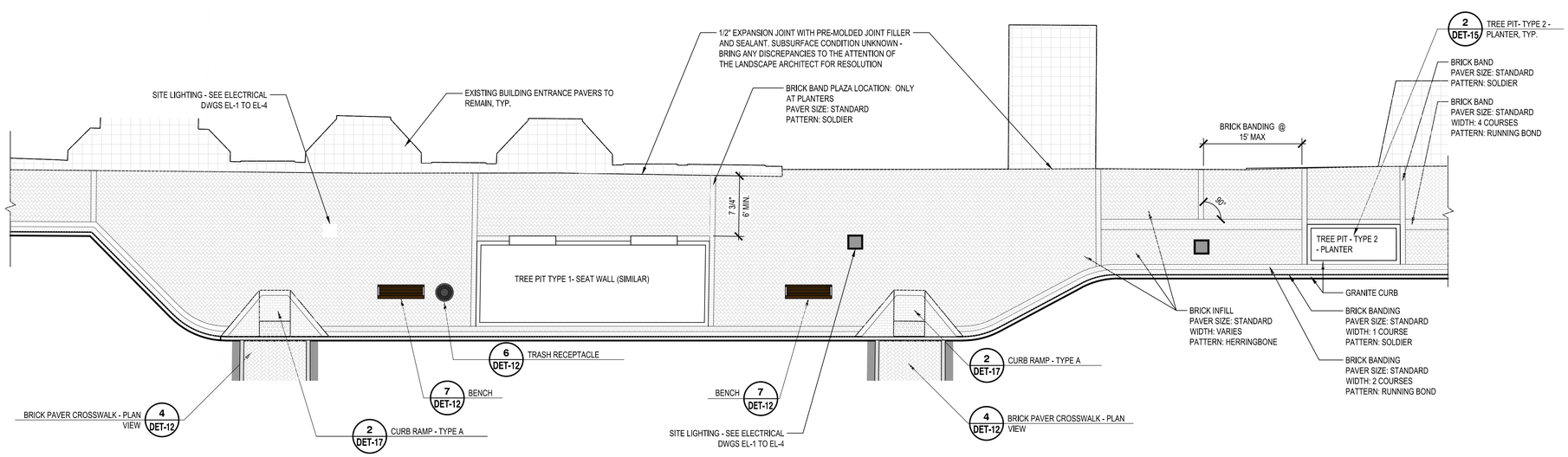

3 PAVING PATTERN - STREET TYPE 4 ALONG MAIN STREET BUILDINGS

NOT TO SCALE — CT-BR-89

Project:

TOWN OF BRANFORD

MAIN STREET RECONSTRUCTION AND REHABILITATION
PROJECT NO.: L014-0002

1019 MAIN STREET
BRANFORD, CT 06405

Weston & Sampson

Weston & Sampson Engineers, Inc.
712 Brook Street, Suite 103
Rocky Hill, CT 06067
860.513.1473 800.SAMPSON
www.westonandsampson.com

Consultants:

Revisions:

No.	Date	Description

Seal:

COA:

Issued For:

BID SET

Scale:	AS NOTED
Date:	DECEMBER 13, 2024
Drawn By:	JT, JC
Reviewed By:	RC
Approved By:	MJJ
W&S Project No.:	ENG21-0163
W&S File No.:	

Drawing Title:

LANDSCAPE DETAILS

Sheet Number:

DET-13

COPYRIGHT 2024 WESTON & SAMPSON

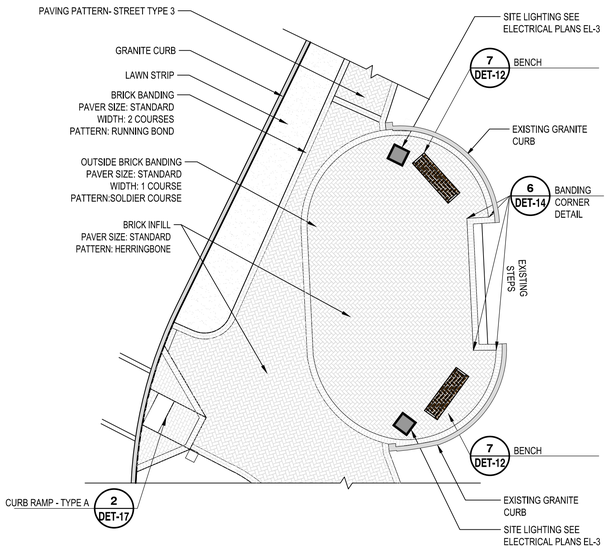

1 PAVING PATTERN - STREET TYPE 6

NOT TO SCALE CT-BR-90

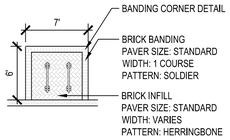

4 PAVING PATTERN - AT BIKE RACK

NOT TO SCALE CT-BR-86

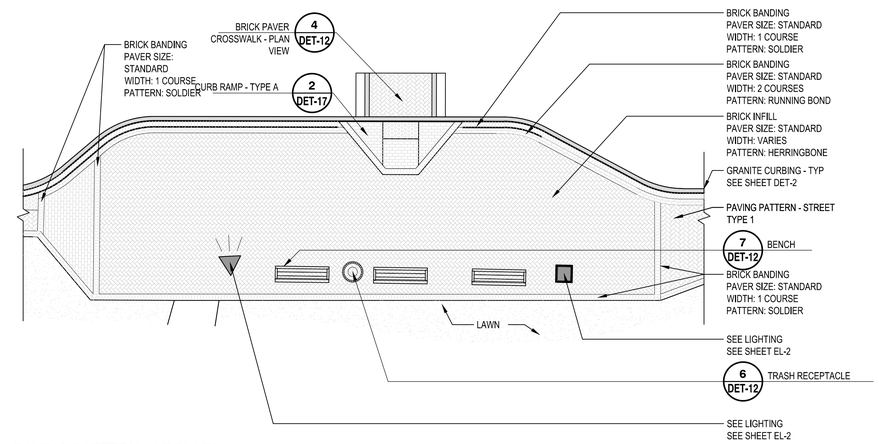

5 PAVING PATTERN - AT PLAZA

NOT TO SCALE CT-BR-87

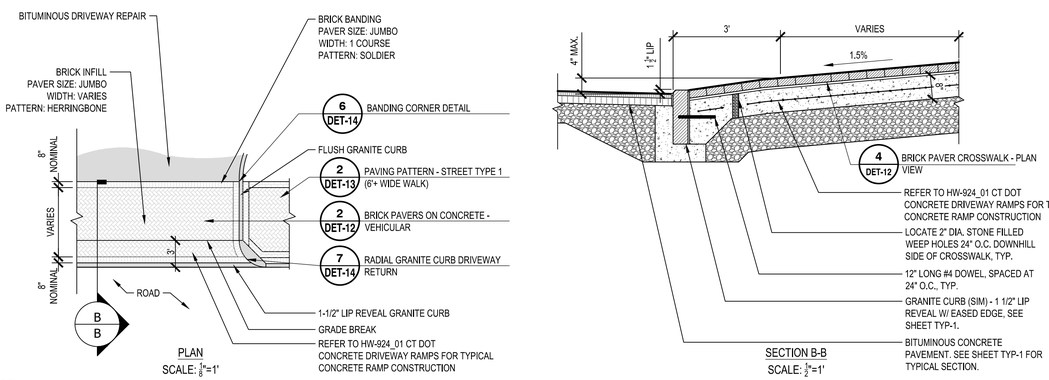

2 PAVING PATTERN - DRIVEWAY APRON

NOT TO SCALE CT-BR-78

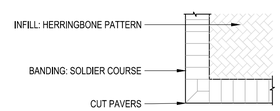

6 BANDING CORNER DETAIL

NOT TO SCALE CT-BR-113

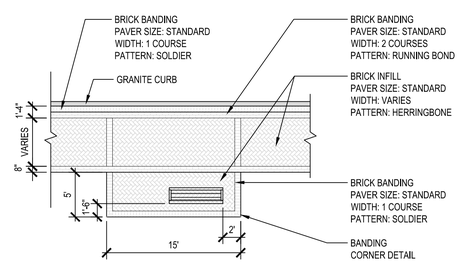

NOTE:
WHEN ADJACENT TRASH CAN, SPACE THIS WAY, WHEN NO TRASH CAN, CENTER ON PAD ALL DIRECTIONS.

3 PAVING PATTERN - AT BENCH

NOT TO SCALE CT-BR-83

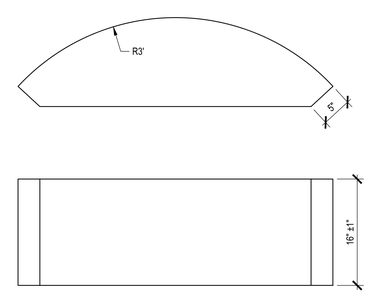

7 RADIAL GRANITE CURB DRIVEWAY RETURN

NOT TO SCALE CT-BR-126

Project:

TOWN OF BRANFORD

MAIN STREET
RECONSTRUCTION AND
REHABILITATION
PROJECT NO.: L014-0002

1019 MAIN STREET
BRANFORD, CT 06405

Weston & Sampson

Weston & Sampson Engineers, Inc.
712 Brook Street, Suite 103
Rocky Hill, CT 06067
860.513.1473 800.SAMPSON
www.westonandsampson.com

Consultants:

Revisions:

No.	Date	Description

Seal:

COA:

Issued For:

BID SET

Scale:	AS NOTED
Date:	DECEMBER 13, 2024
Drawn By:	JT, JC
Reviewed By:	RC
Approved By:	MJJ
W&S Project No.:	ENG21-0163
W&S File No.:	

Drawing Title:

LANDSCAPE DETAILS

Sheet Number:

DET-14

COPYRIGHT 2024 WESTON & SAMPSON

p:\CT\branford-chwy2-12003, town of branford\cad\Main\DwLA\CONSTRUCTION\DET14-5.dwg

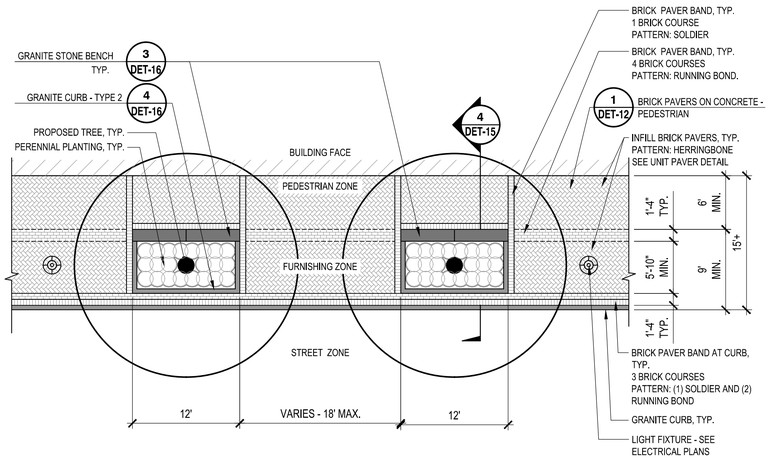

1 TREE PIT- TYPE 1 - SEATWALL, TYP.

NOT TO SCALE

CT-BR-39

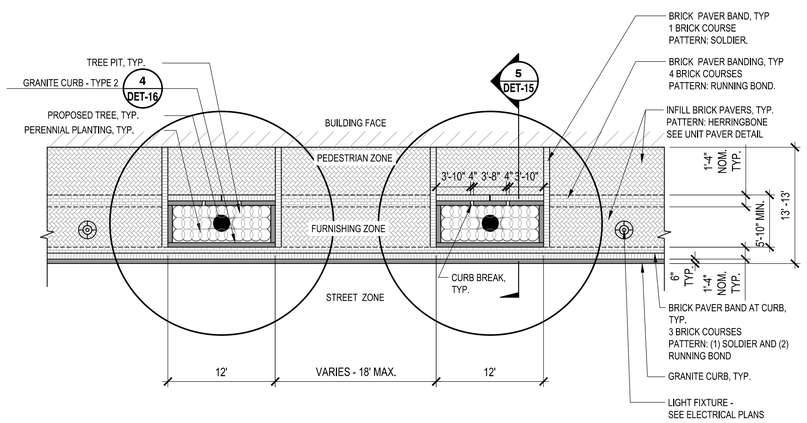

2 TREE PIT- TYPE 2 - PLANTER, TYP.

NOT TO SCALE

CT-BR-41

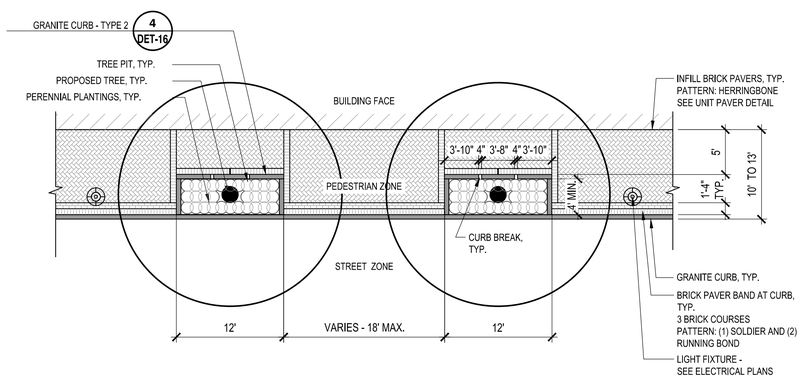

3 TREE PIT- TYPE 3 - NARROW, TYP.

NOT TO SCALE

CT-BR-43

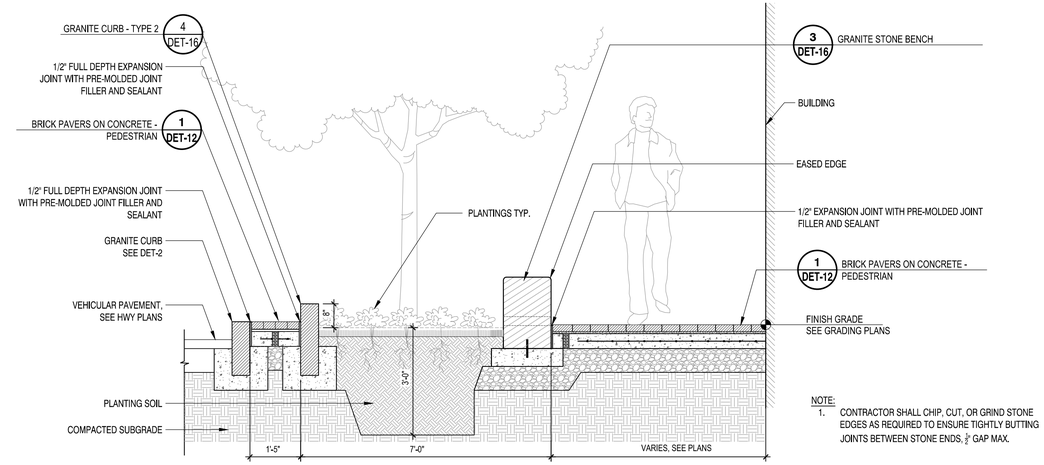

NOTE:
1. CONTRACTOR SHALL CHIP, CUT, OR GRIND STONE EDGES AS REQUIRED TO ENSURE TIGHTLY BUTTING JOINTS BETWEEN STONE ENDS, $\frac{1}{8}$" GAP MAX.

4 SECTION - TREE PIT- TYPE1 -SEATWALL, TYP.

NOT TO SCALE

CT-BR-40

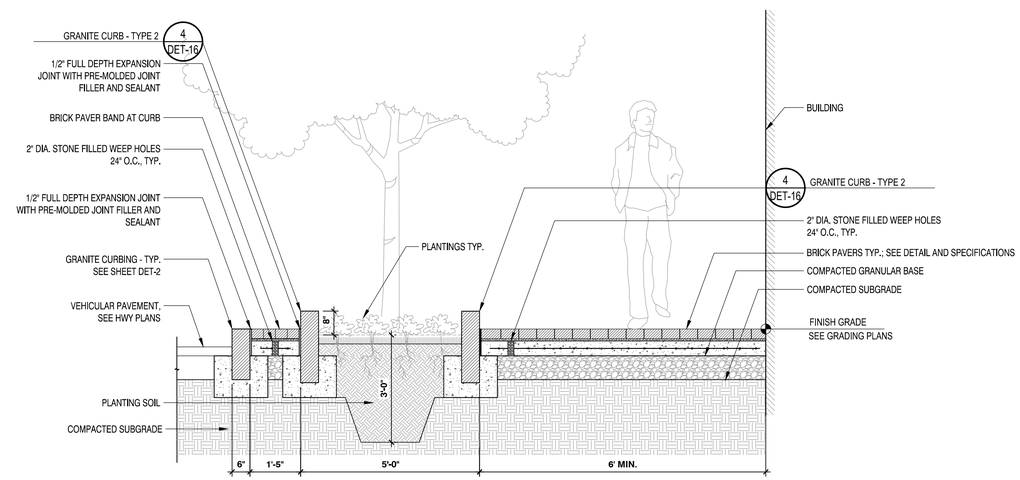

5 SECTION - TREE PIT- TYPE 2 PLANTER, TYP.

NOT TO SCALE

CT-BR-42

Project:

TOWN OF BRANFORD

MAIN STREET RECONSTRUCTION AND REHABILITATION
PROJECT NO.: L014-0002

1019 MAIN STREET
BRANFORD, CT 06405

Weston & Sampson

Weston & Sampson Engineers, Inc.
712 Brook Street, Suite 103
Rocky Hill, CT 06067
860.513.1473 800.SAMPSON
www.westonandsampson.com

Consultants:

Revisions:

No.	Date	Description

Seal:

COA:

Issued For:

BID SET

Scale:	AS NOTED
Date:	DECEMBER 13, 2024
Drawn By:	JT, JC
Reviewed By:	RC
Approved By:	MJJ
W&S Project No.:	ENG21-0163
W&S File No.:	

Drawing Title:

LANDSCAPE DETAILS

Sheet Number:

DET-15

COPYRIGHT 2024 WESTON & SAMPSON

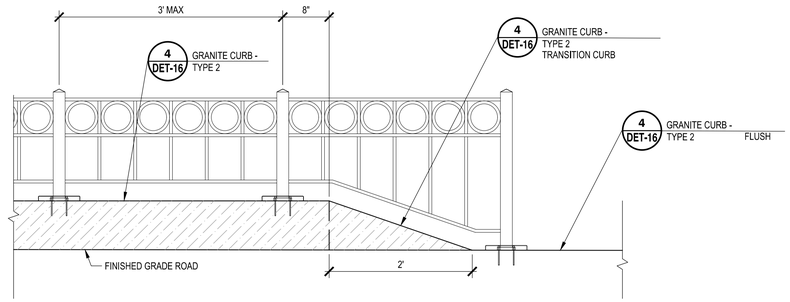

ELEVATION AT TRANSITION CURB

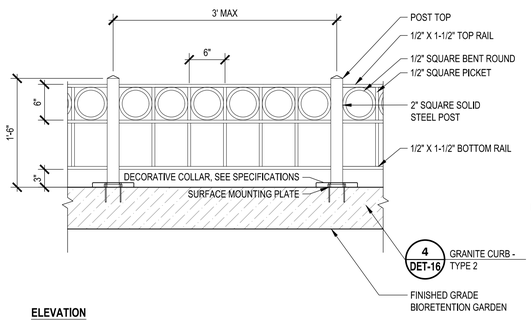

ELEVATION

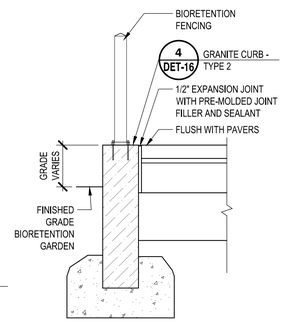

SECTION

NOTES:
1. FENCE POSTS TO BE ATTACHED TO CURB AS RECOMMENDED BY MANUFACTURER.
2. POST SPACING 36" O.C. OR AS SHOWN ON PLANS.
3. FENCE TO EXTEND 18" IN HEIGHT ABOVE TOP OF CURB.
4. POST TOPS TO BE DETERMINED BY OWNER. CONTRACTOR TO APPROVE SUBMITTAL PRIOR TO ORDERING AND INSTALLING.

1 BIORETENTION GARDEN FENCING

NOT TO SCALE CT-BR-91

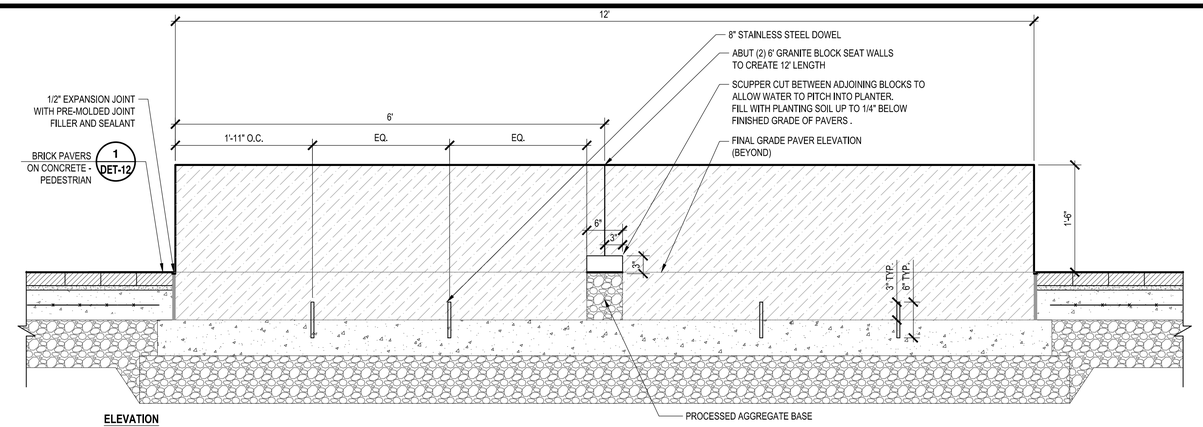

ELEVATION

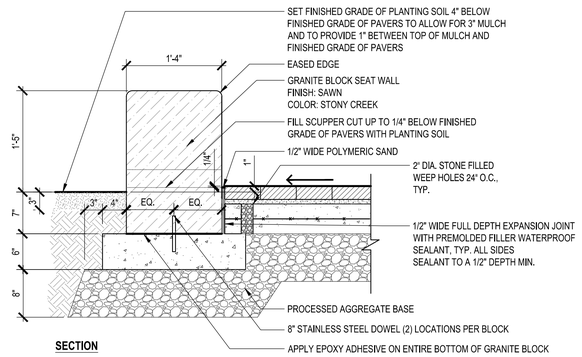

SECTION

NOTES:
1. **CONTRACTOR TO SCHEDULE MEETING WITH LANDSCAPE ARCHITECT TO COORDINATE AND SELECT GRANITE BLOCKS PRIOR TO ORDERING AND INSTALL.**
2. **CONTRACTOR TO SUBMIT SHOP DRAWINGS FOR LANDSCAPE ARCHITECT'S APPROVAL PRIOR TO ORDERING AND INSTALL.**
3. **CONTRACTOR SHALL CHIP, CUT, OR GRIND STONE EDGES AS REQUIRED TO ENSURE TIGHTLY BUTTING JOINTS BETWEEN STONE ENDS, 1/2" GAP MAX.**

3 GRANITE STONE BENCH

NOT TO SCALE CT-BR-95

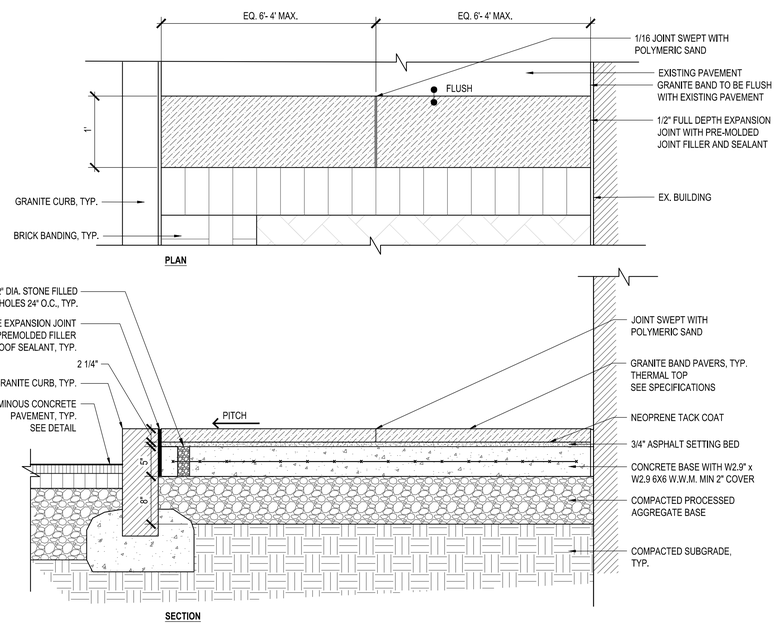

2 GRANITE BAND

NOT TO SCALE CT-BR-99

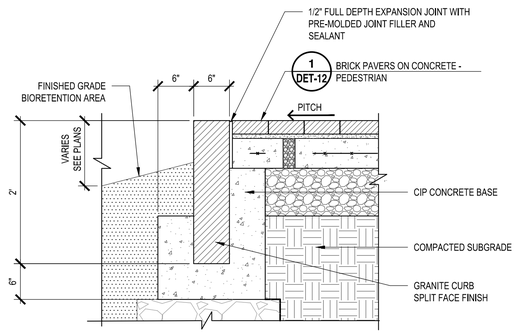

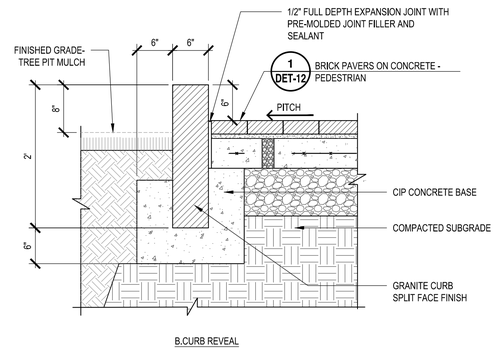

4 GRANITE CURB - TYPE 2

NOT TO SCALE CT-BR-122

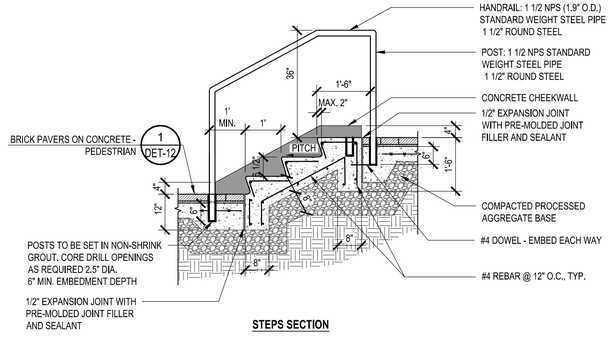

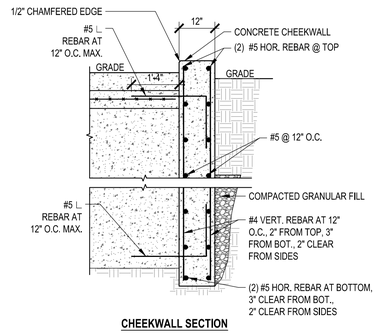

5 CONCRETE STEPS WITH HANDRAILS

NOT TO SCALE CT-BR-97

Project:

TOWN OF BRANFORD

MAIN STREET RECONSTRUCTION AND REHABILITATION
PROJECT NO.: L014-0002

1019 MAIN STREET
BRANFORD, CT 06405

Weston & Sampson

Weston & Sampson Engineers, Inc.
712 Brook Street, Suite 103
Rocky Hill, CT 06067
860.513.1473 800.SAMPSON
www.westonandsampson.com

Consultants:

Revisions:

No.	Date	Description

Seal:

COA:

Issued For:

BID SET

Scale:	AS NOTED
Date:	DECEMBER 13, 2024
Drawn By:	JT, JC
Reviewed By:	RC
Approved By:	MJJ
W&S Project No.:	ENG21-0163
W&S File No.:	

Drawing Title:

LANDSCAPE DETAILS

Sheet Number:

DET-16

COPYRIGHT 2024 WESTON & SAMPSON

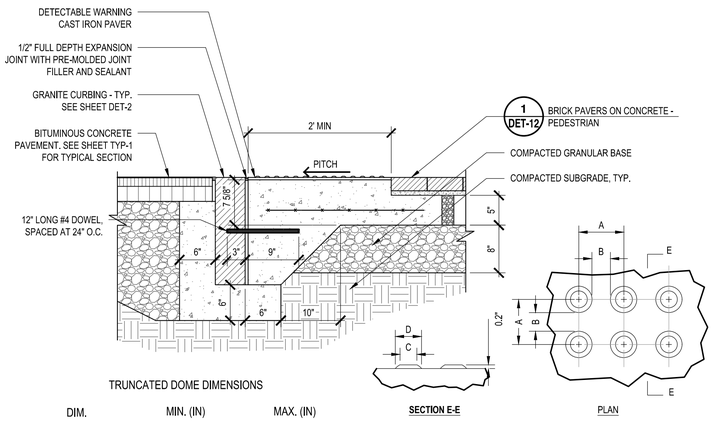

TRUNCATED DOME DIMENSIONS

DIM.	MIN. (IN)	MAX. (IN)
A	1.60"	2.40"
B	0.65"	1.50"
C	50% - 65% OF D DIM.	
D	0.90"	1.40"

DETECTABLE WARNING SURFACE

1 DETECTABLE WARNING SURFACE

NOT TO SCALE

CT-BR-117

NOTES:
1. SEE CTDOT SIDEWALK RAMP (TYPE 4A) STANDARD DETAIL FOR SLOPES AND GRADING INFORMATION.

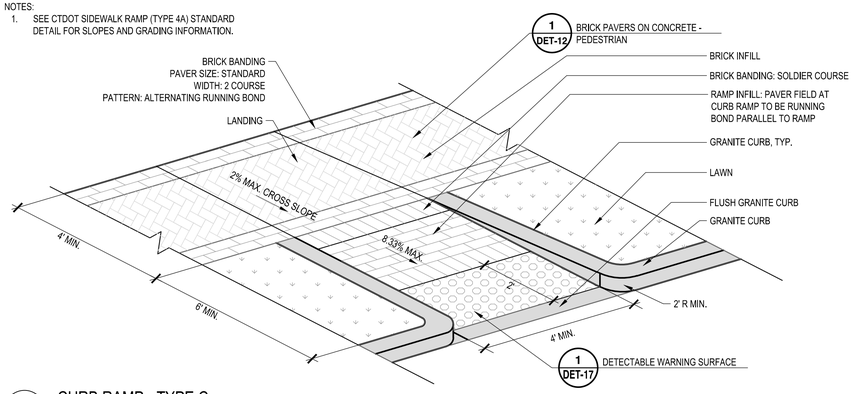

4 CURB RAMP - TYPE C

NOT TO SCALE

CT-BR-68

TYPICAL CURB RAMP NOTES:

1. SEE IGP-1 TO IGP-4 FOR SPECIFIC SPOT GRADES.
2. IF CONTRACTOR FAILS TO CONFIRM FINAL CURBING, SIDEWALK, RAMPS LIMITS AND GRADES WITH THE DESIGNER AND CITY REPRESENTATIVE, CONTRACTOR SHALL STAKE OUT PROPOSED CURB LINE AND STRAIGHT LINE TOP OF CURB PRIOR TO INSTALLATION. ONCE STAKED, THE CONTRACTOR. DESIGNER AND CITY REPRESENTATIVE SHALL MEET IN THE FIELD TO CONFIRM FINAL CURBING, SIDEWALK AND SIDEWALK RAMP LIMITS AND GRADES PRIOR TO INSTALLATION OR PLACEMENT OF CONCRETE. PRIOR TO PLACING CONCRETE, THE CONTRACTOR MAY BE REQUIRED TO REMOVE AND REPLACE THE CONCRETE AT THEIR OWN EXPENSE.
3. CONTRACTOR SHALL PROVIDE CLEAN AND STRAIGHT SAWCUT LINES AT LIMIT OF REMOVAL OF EXISTING ASPHALT PAVEMENT TO REMAIN. CONTRACTOR SHALL VERIFY LIMITS OF EXISTING ASPHALT PAVEMENT REMOVAL PRIOR TO COMMENCING DEMOLITION.
4. CONTRACTOR SHALL REMOVE AND REPLACE ASPHALT PAVEMENT, GRAVEL BORROW, AND SUBGRADE NECESSARY TO CONSTRUCT A CLEAN, SMOOTH TRANSITION AT ADA CURB CUT.
5. CURB REVEAL SHALL MATCH EXISTING REVEAL AT AND BEYOND THE PROJECT LIMITS UNLESS NOTED OTHERWISE ON PLANS. CURB REVEAL SHALL BE TRANSITIONS FROM PROPOSED CURB REVEAL TO MATCH EXISTING AT 20:1 MAX. SLOPE.
6. CONTRACTOR SHALL SUBMIT SHOP DRAWINGS FOR EACH SIDEWALK RAMP DEPICTING SPOT ELEVATIONS AT EACH CORNER AND CHANGE IN CROSS SLOPE. COST FOR SHOP DRAWINGS TO BE INCLUDED IN THE COST FOR THE SIDEWALK RAMP.

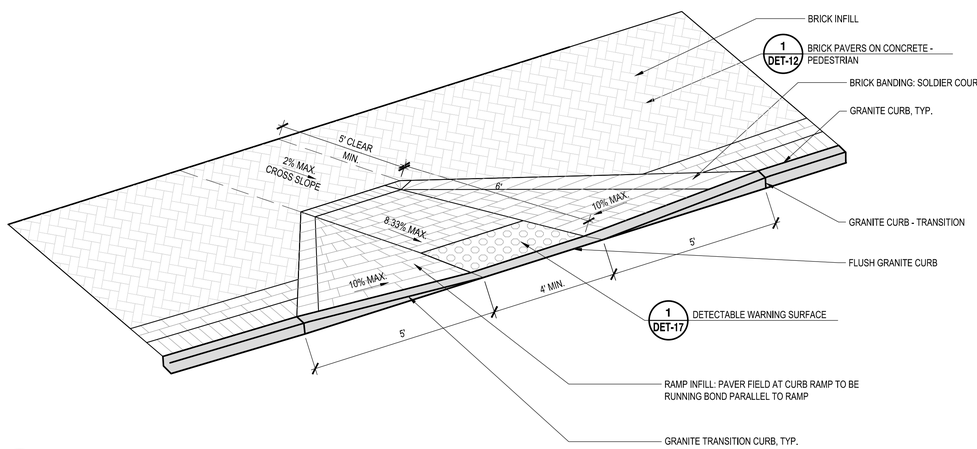

NOTE:
1. SEE CTDOT SIDEWALK RAMP TYPE 8 STANDARD DETAIL FOR MAX SLOPE AND GRADING INFORMATION.

2 CURB RAMP - TYPE A

NOT TO SCALE

CT-BR-55

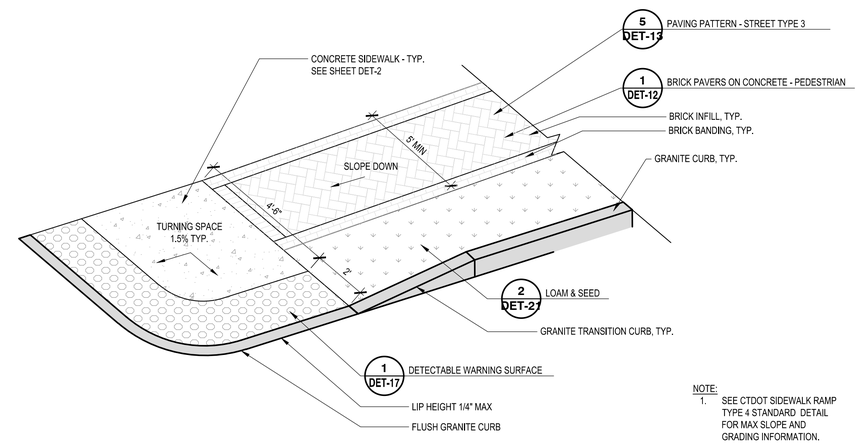

NOTE:
1. SEE CTDOT SIDEWALK RAMP TYPE 4 STANDARD DETAIL FOR MAX SLOPE AND GRADING INFORMATION.

5 BLENDED TRANSITION CURB RAMP

NOT TO SCALE

CT-BR-128

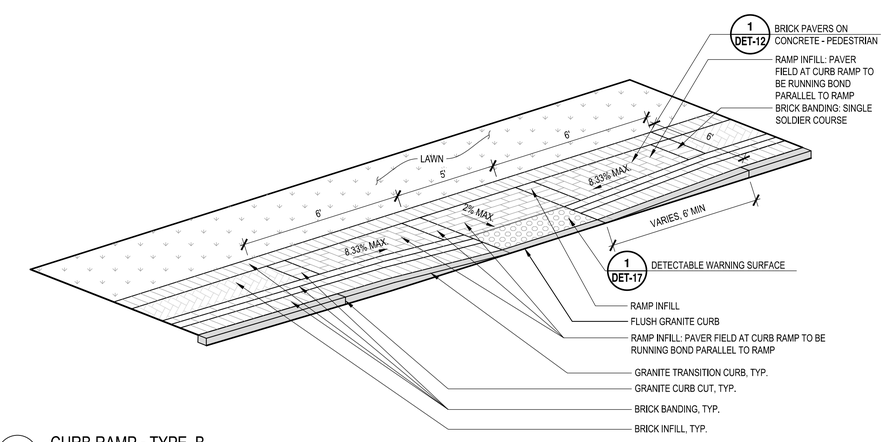

3 CURB RAMP - TYPE B

NOT TO SCALE

CT-BR-72

NOTES:
1. SEE CTDOT SIDEWALK RAMP (TYPE 4A) STANDARD DETAIL FOR SLOPES AND GRADING INFORMATION.

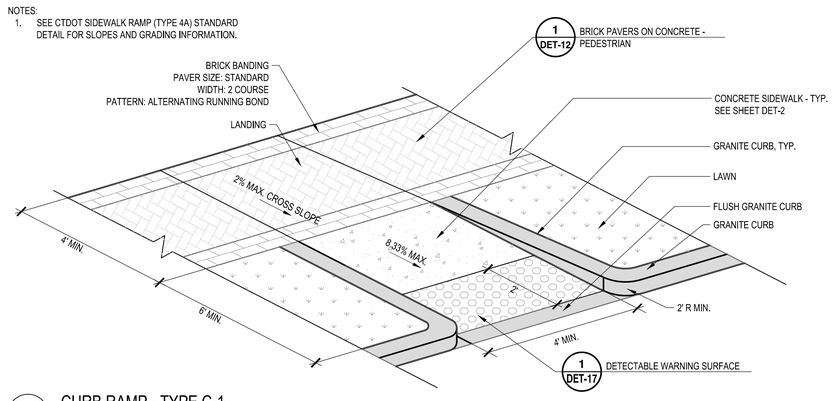

6 CURB RAMP - TYPE C-1

NOT TO SCALE

CT-BR-129

Project:

TOWN OF BRANFORD

MAIN STREET RECONSTRUCTION AND REHABILITATION
PROJECT NO.: L014-0002

1019 MAIN STREET
BRANFORD, CT 06405

Weston & Sampson

Weston & Sampson Engineers, Inc.
712 Brook Street, Suite 103
Rocky Hill, CT 06067
860.513.1473 800.SAMPSON
www.westonandsampson.com

Consultants:

Revisions:

No.	Date	Description

Seal:

COA:

Issued For:

BID SET

Scale:	AS NOTED
Date:	DECEMBER 13, 2024
Drawn By:	JT, JC
Reviewed By:	RC
Approved By:	MJJ
W&S Project No.:	ENG21-0163
W&S File No.:	

Drawing Title:

LANDSCAPE DETAILS

Sheet Number:

DET-17

COPYRIGHT 2024 WESTON & SAMPSON

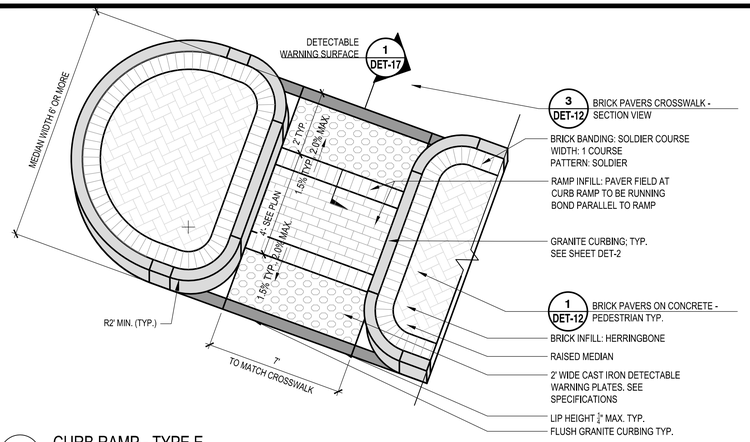

1 CURB RAMP - TYPE E

NOT TO SCALE

CT-BR-118

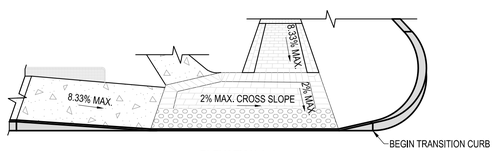

ELEVATION A-A

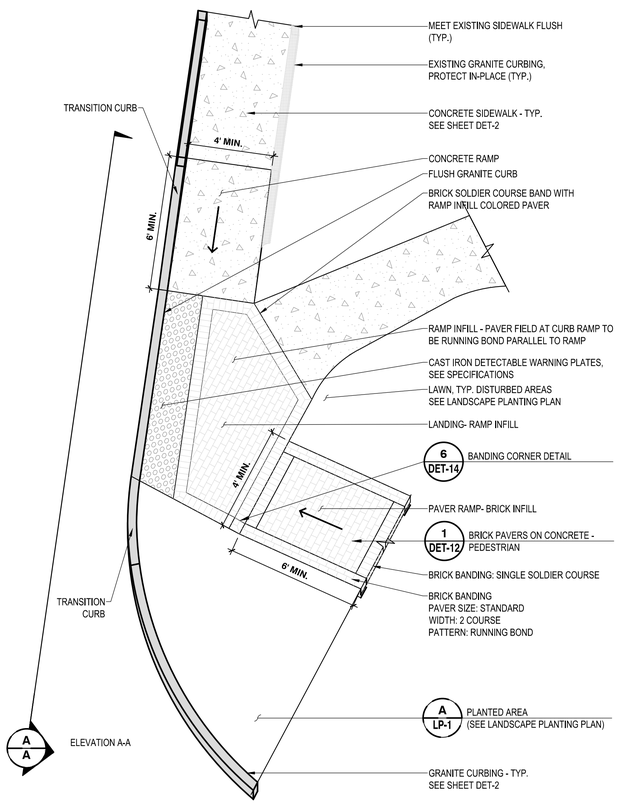

2 CURB RAMP - TYPE D (CUSTOM)

NOT TO SCALE

CT-BR-119

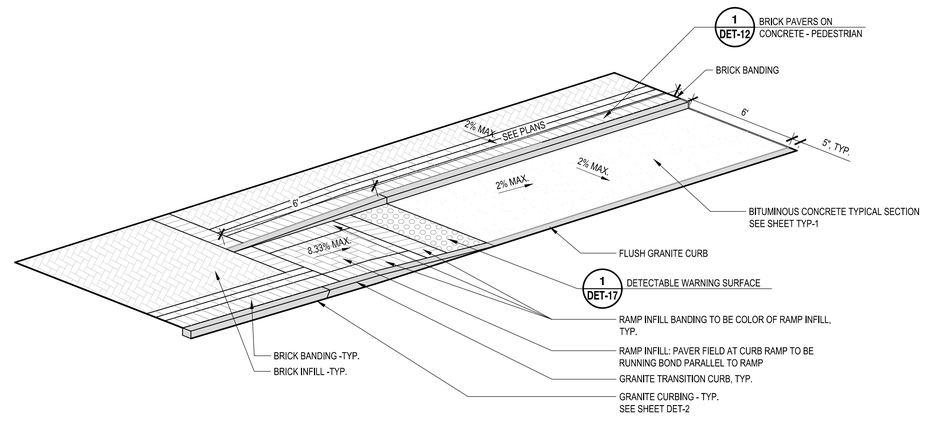

3 CURB RAMP - TYPE F (ACCESSIBLE PARALLEL PARKING STALL)

NOT TO SCALE

CT-BR-121

Project:

TOWN OF BRANFORD

MAIN STREET
RECONSTRUCTION AND
REHABILITATION
PROJECT NO.: L014-0002

1019 MAIN STREET
BRANFORD, CT 06405

Weston & Sampson

Weston & Sampson Engineers, Inc.
712 Brook Street, Suite 103
Rocky Hill, CT 06067
860.513.1473 800.SAMPSON
www.westonandsampson.com

Consultants:

Revisions:

No.	Date	Description

Seal:

COA:

Issued For:

BID SET

Scale:	AS NOTED
Date:	DECEMBER 13, 2024
Drawn By:	JT, JC
Reviewed By:	RC
Approved By:	MJJ
W&S Project No.:	ENG21-0163
W&S File No.:	

Drawing Title:

LANDSCAPE DETAILS

Sheet Number:

DET-18

COPYRIGHT 2024 WESTON & SAMPSON

PLANT SCHEDULE

REFER TO LP-4 PLANT SCHEDULE FOR TREE INFORMATION

SYMBOL	CODE	QTY	BOTANICAL NAME	COMMON NAME	SIZE	CONTAINER
SHRUBS						
AB	AB	16	AMSONIA TABERNAEMONTANA 'BLUE ICE'	BLUE ICE EASTERN BLUESTAR	#1	CONT.
AW	AW	15	ASTER DUMOSUS 'WOOD'S LIGHT BLUE'	WOOD'S LIGHT BLUE ASTER	#1	CONT.
ES	ES	17	ERAGROSTIS SPECTABILIS	PURPLE LOVEGRASS	#1	
ED	ED	10	EUPATORIUM DUBIUM 'BABY JOE'	BABY JOE PYE WEED	#1	CONT.
HN	HN	10	HELENIUM AUTUMNALE `FUEGO`	MARIACHI™ FUEGO SNEEZEWEED	#1	CONT.
SSB	SSB	29	SCHIZACHYRIUM SCOPARIUM 'BLAZE'	BLAZE LITTLE BLUESTEM	#1	CONT.
SSP	SSP	6	SOLIDAGO SPECIOSA	SHOWY GOLDENROD	#1	CONT.
SH	SH	24	SPOROBOLUS HETEROLEPIS 'TARA'	TARA PRAIRIE DROPSEED	#1	CONT.

SYMBOL	CODE	QTY	BOTANICAL NAME	COMMON NAME	SIZE	CONTAINER	SPACING
GROUND COVERS							
AG2	AG2	32	ARONIA MELANOCARPA 'UCONNAM012'	GROUND HUG® BLACK CHOKEBERRY	#2	CONTAINER	24" o.c.

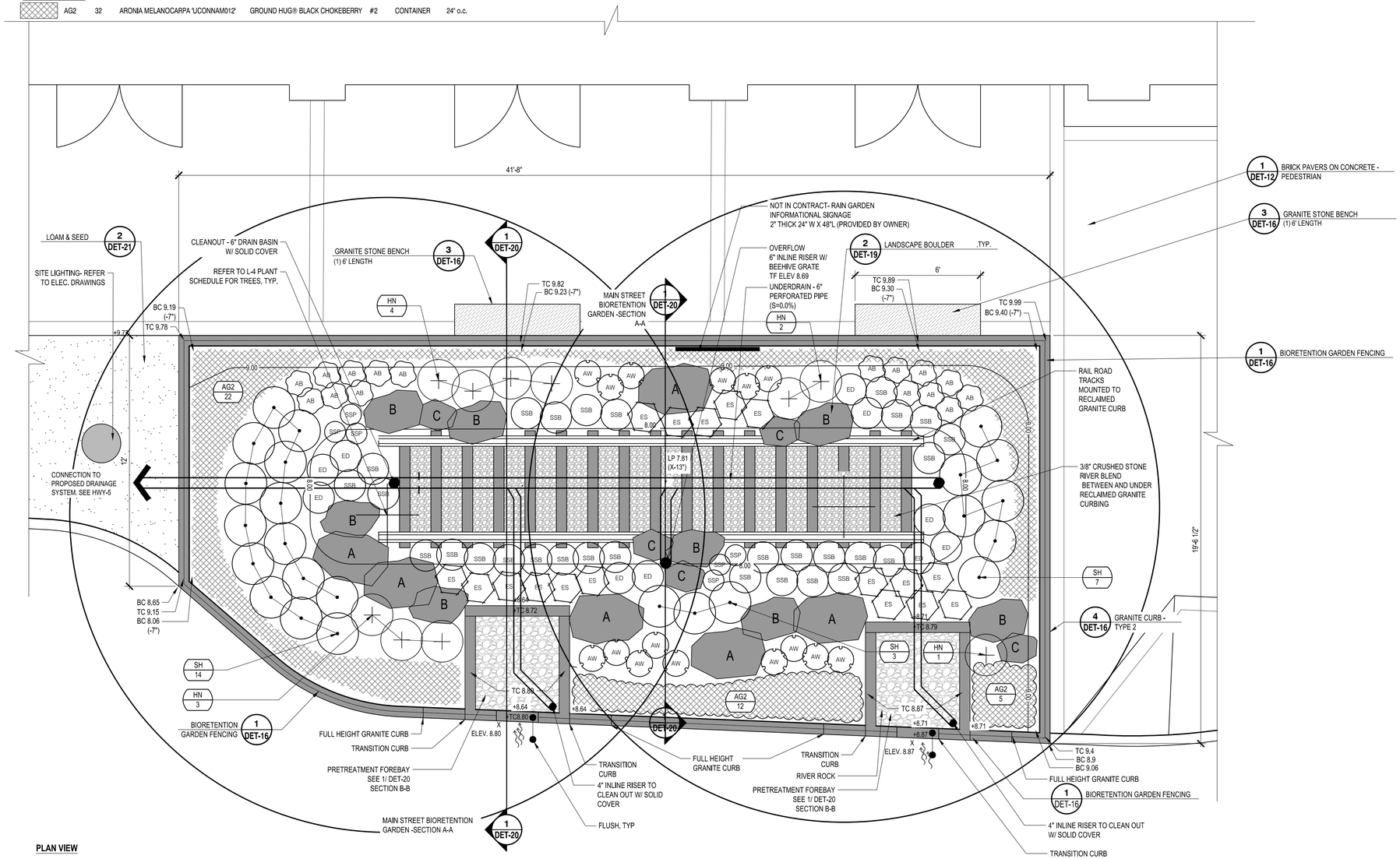

PLAN VIEW

1 ROADSIDE BIORETENTION GARDEN - MAIN STREET

NOT TO SCALE

CT-BR-114

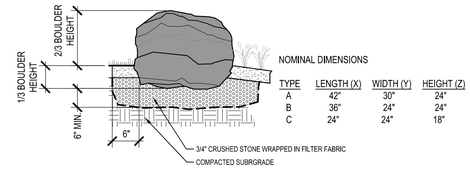

NOMINAL DIMENSIONS

TYPE	LENGTH (X)	WIDTH (Y)	HEIGHT (Z)
A	42"	30"	24"
B	36"	24"	24"
C	24"	24"	18"

NOTES:
1. BOULDER HEIGHT TO RANGE FROM 18"-24"
2. BOULDERS TO BE SELECTED FROM QUARRY BY LANDSCAPE ARCHITECT
3. LANDSCAPE ARCHITECT TO BE PRESENT DURING PLACEMENT OF BOULDERS IN THE RAIN GARDENS

2 LANDSCAPE BOULDER

NOT TO SCALE

CT-BR-93

Project:

TOWN OF BRANFORD

MAIN STREET RECONSTRUCTION AND REHABILITATION
PROJECT NO.: L014-0002

1019 MAIN STREET
BRANFORD, CT 06405

Weston & Sampson

Weston & Sampson Engineers, Inc.
712 Brook Street, Suite 103
Rocky Hill, CT 06067
860.513.1473 800.SAMPSON
www.westonandsampson.com

Consultants:

Revisions:

No.	Date	Description

Seal:

COA:

Issued For:

BID SET

Scale:	AS NOTED
Date:	DECEMBER 13, 2024
Drawn By:	JT, JC
Reviewed By:	RC
Approved By:	MJJ
W&S Project No.:	ENG21-0163
W&S File No.:	

Drawing Title:

LANDSCAPE DETAILS

Sheet Number:

DET-19

COPYRIGHT 2024 WESTON & SAMPSON

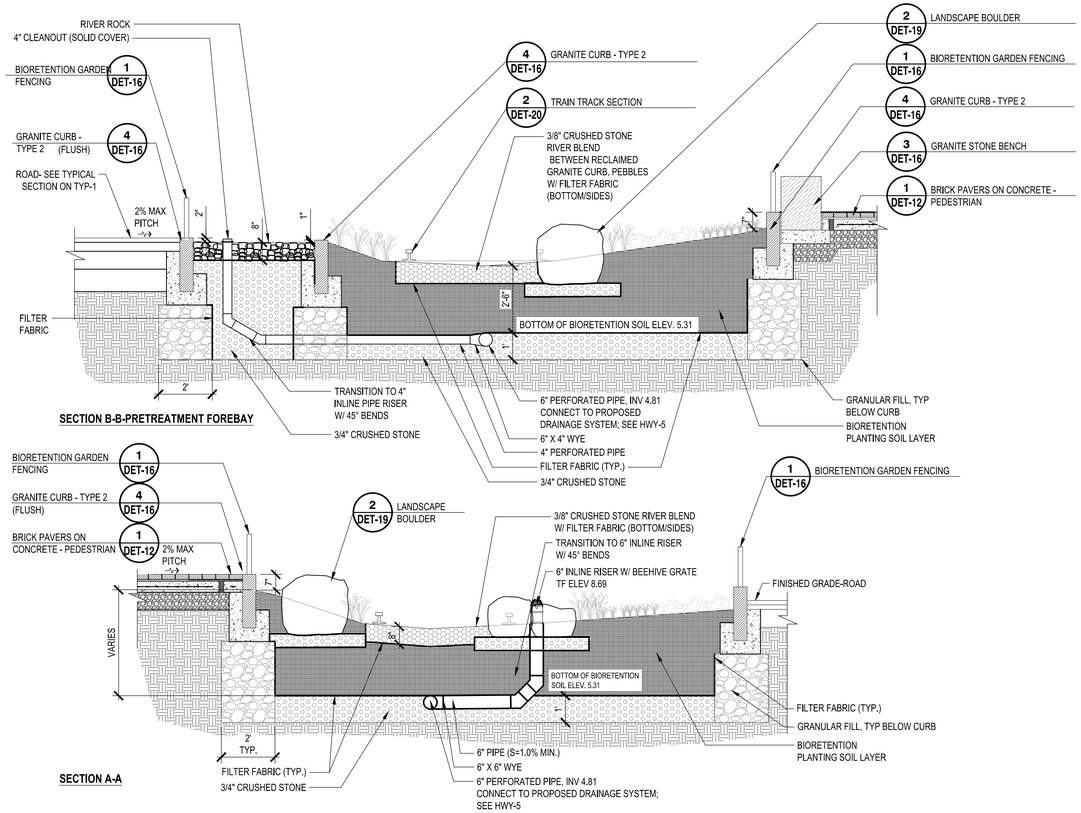

1 MAIN STREET BIORETENTION GARDEN -SECTION A-A

NOT TO SCALE — CT-BR-61

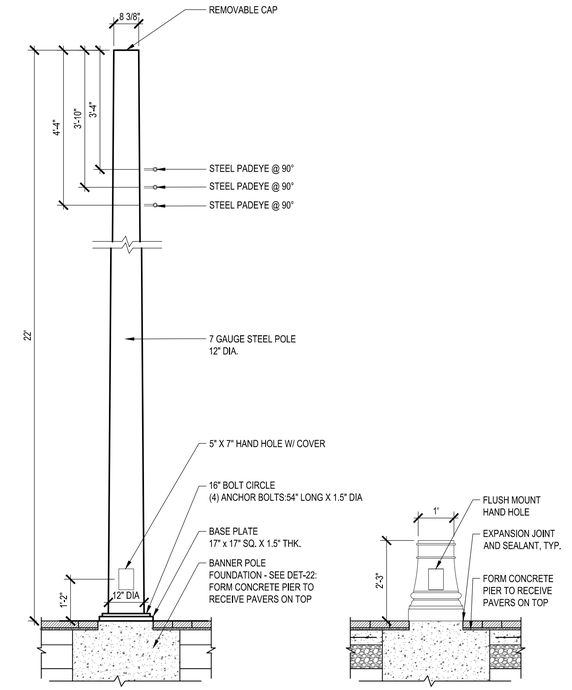

NOTES:
1. PROVIDE SHOP DRAWINGS WITH ALLOWABLE WIND LOADING DESIGN STANDARDS.
2. BANNER POLE FOUNDATION - SEE DET-22: FORM CONCRETE PIER TO RECEIVE PAVERS ON TOP

BANNER POLE ASSEMBLY

NOTES:
1. MODEL: BRANFORD BASE BY PENNGLOBE
2. BASE TO BE CLAMSHELL BASE CASTING

DECORATIVE BASE PLATE

3 BANNER POLE

NOT TO SCALE — CT-BR-116

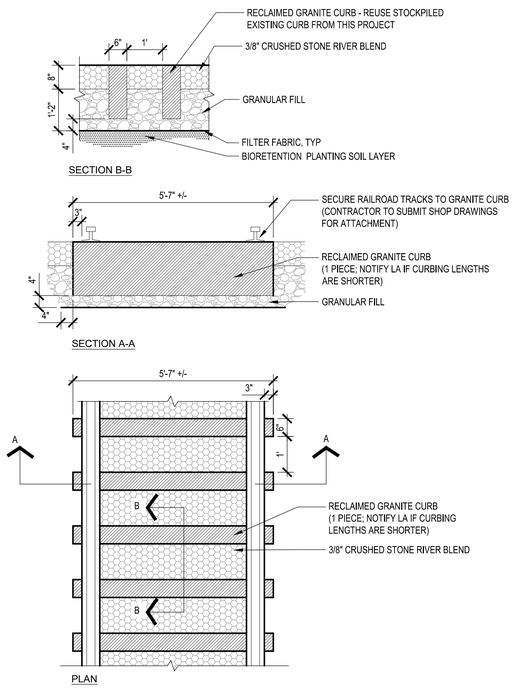

2 TRAIN TRACK SECTION

NOT TO SCALE — CT-BR-107

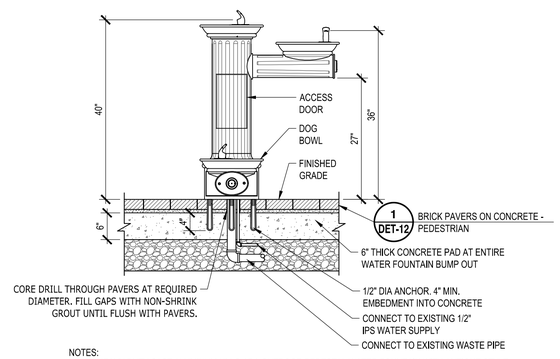

NOTES:
1. HEAVY DUTY CAST ALUMINUM HI-LO ADA OUTDOOR PEDESTAL WATER FOUNTAIN WITH ANTIQUE STYLE: MODEL 3511 WITH DOG BOWL BY HAWES CORPORATION, 1455 KLEPPE LANE, SPARKS, NV 89431; PHONE 775-359-4712. WWW.HAWSCO.COM
2. COLOR: POWDER COAT FINISH. CUSTOM GREEN TO MATCH EXISTING DOWNTOWN SITE FURNISHINGS.
3. CONTRACTOR SHALL INSTALL ACCORDING TO MANUFACTURER INSTALLATION GUIDELINES.
4. CONTRACTOR OWNS COMPLETE INSTALLATION OF WORKING SYSTEM.
5. CONTRACTOR SHALL SUPPLY OWNER WITH OPERATIONS AND MAINTENANCE MANUAL AS WELL AS TRAINING OF ANY ANNUAL MAINTENANCE AND WINTERIZATION OF SYSTEM.
6. WATER CONNECTIONS TO COMPLY WITH ALL HEALTH CODES FOR WATER SUPPLY AND BACKFLOW AS NEEDED.
7. VERIFY SOURCE OF EXISTING WATER SUPPLY.

4 PEDESTAL WATER FOUNTAIN WITH DOG BOWL

NOT TO SCALE — CT-BR-120

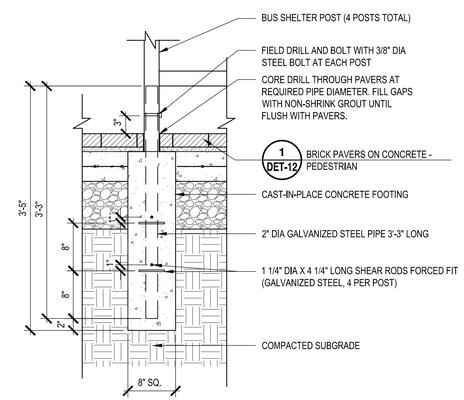

5 BUS SHELTER FOOTING

NOT TO SCALE — CT-BR-125

Project:

TOWN OF BRANFORD

MAIN STREET RECONSTRUCTION AND REHABILITATION
PROJECT NO.: L014-0002

1019 MAIN STREET
BRANFORD, CT 06405

Weston & Sampson

Weston & Sampson Engineers, Inc.
712 Brook Street, Suite 103
Rocky Hill, CT 06067
860.513.1473 800.SAMPSON
www.westonandsampson.com

Consultants:

Revisions:

No.	Date	Description

Seal:

COA:

Issued For:

BID SET

Scale:	AS NOTED
Date:	DECEMBER 13, 2024
Drawn By:	JT, JC
Reviewed By:	RC
Approved By:	MJJ
W&S Project No.:	ENG21-0163
W&S File No.:	

Drawing Title:

LANDSCAPE DETAILS

Sheet Number:

DET-20

COPYRIGHT 2024 WESTON & SAMPSON

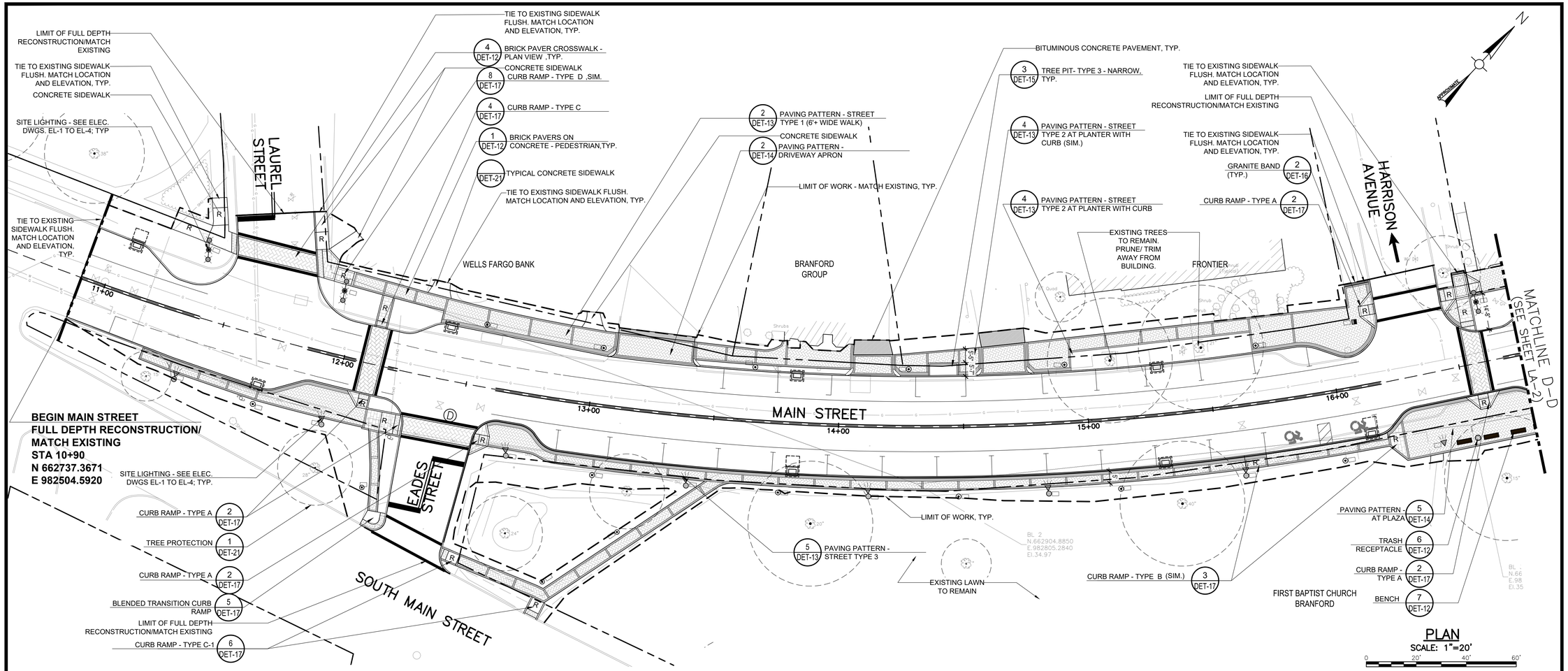

PLAN

SCALE: 1"=20'

1 ENLARGEMENT PLAN A

SCALE:1"=20'-0"

MATERIAL AND LAYOUT NOTES

1. NEW HARDSCAPE SHALL MEETING EXISTING HARDSCAPE FLUSH.
2. HATCH PATTERNS ARE A GRAPHICAL REPRESENTATION OF DESIGN INTENT. REFER TO DETAILS AND SPECIFICATIONS FOR PATTERN AND COURSES.
3. REFER TO LAP-1 TO LAP-4 FOR LANDSCAPE ITEMS.
4. REFER TO EXISTING CONDITIONS PLANS FOR SURVEY INFORMATION (SHEET EX-1 AND EX-2).
5. COORDINATE ALL LAYOUT ACTIVITIES WITH THE SCOPE OF WORK CALLED FOR BY DEMOLITION, GRADING AND UTILITIES OPERATIONS ENCOMPASSED BY THIS CONTRACT. SET, PROTECT AND REPLACE REFERENCE STAKES AS NECESSARY OR AS REQUIRED BY THE OWNER'S REPRESENTATIVE.
6. ALL WORK SHALL BE PERFORMED BY CONTRACTOR UNLESS SPECIFICALLY INDICATED THAT THE WORK WILL BE PERFORMED "BY OTHERS" OR "UNDER SEPARATE CONTRACT" OR "NOT IN CONTRACT (NIC)".
7. TO FACILITATE LAYOUT OF PROPOSED SITE FEATURES AND FACILITIES, LAYOUT INFORMATION FOR CERTAIN FUTURE WORK, WHICH IS NOT INCLUDED WITHIN THE SCOPE OF THIS CONTRACT HAS BEEN PROVIDED ON THE LAYOUT AND MATERIALS PLAN FOR INFORMATION ONLY. SOME ITEMS ARE "NOT IN CONTRACT" (NIC) AND SHOWN FOR REFERENCE ONLY.
8. THE LAYOUT OF SITE AMENITIES AND FENCES MUST BE APPROVED BY THE LANDSCAPE ARCHITECT PRIOR TO INSTALLATION.
9. THE LAYOUT OF ALL NEW PATHWAYS / WALKWAYS AND THE GRADING OF ALL SLOPES AND CROSS SLOPES SHALL CONFORM TO THE CONNECTICUT RULES AND REGULATIONS FOR HANDICAP ACCESS CMR 521, AND THE AMERICANS WITH DISABILITIES ACT (ADA), TITLE 3. THE CONTRACTOR SHALL NOTIFY THE OWNER IMMEDIATELY OF ANY DISCREPANCIES BETWEEN ACTUAL CONDITIONS AND THOSE REQUIRED.
10. ALL LAYOUT LINES, OFFSETS, OR REFERENCES TO LOCATING OBJECTS ARE EITHER PARALLEL OR PERPENDICULAR UNLESS OTHERWISE DESIGNATED WITH ANGLE OFFSETS NOTED.
11. ALL PROPOSED SITE FEATURES SHALL BE LAID OUT AND STAKED BY THE CONTRACTOR FOR REVIEW AND APPROVAL BY THE LANDSCAPE ARCHITECT PRIOR TO COMMENCEMENT OF INSTALLATION. ANY REQUIRED ADJUSTMENTS TO THE LAYOUT SHALL BE UNDERTAKEN AS DIRECTED, AT NO ADDITIONAL COST TO THE OWNER. ALL LAYOUT SHALL BE PERFORMED BY A MA. REGISTERED PROFESSIONAL LAND SURVEYOR.
12. ALL PROPOSED PAVEMENTS SHALL MEET THE LINE AND GRADE OF EXISTING ADJACENT PAVEMENT SURFACES. ALL BITUMINOUS CONCRETE SHALL BE TREATED WITH AN RS-1 TACK COAT AT POINT OF CONNECTION. ALL PATHWAY WIDTHS SHALL BE AS NOTED ON THE LAYOUT AND MATERIALS PLAN.
13. THE CONTRACTOR SHALL VERIFY ALL DIMENSIONS AND GRADES ON THE GROUND AND REPORT ANY DISCREPANCIES IMMEDIATELY TO THE LANDSCAPE ARCHITECT.
14. THE CONTRACTOR SHALL BE RESPONSIBLE FOR FIELD MEASUREMENT OF ALL PROPOSED FENCES AND GATES. IN ADDITION, THE CONTRACTOR SHALL BE RESPONSIBLE FOR CONFIRMING QUANTITIES PRIOR TO ORDERING MATERIALS.
15. THE DEPTH OF LOAM BORROW FOR ALL PROPOSED LAWN AREAS SHALL BE 6" MINIMUM. ALL DISTURBED AREAS SHALL BE RESTORED WITH LOAM AND SEED UNLESS OTHERWISE NOTED. SEE PLANTING PLANS FOR MORE INFORMATION.
16. REFER TO DETAIL DRAWINGS FOR CONSTRUCTION DETAILS.
17. SURVEY CONTROL POINTS AND COORDINATES ARE INDICATED ON THE PLANS. IT IS THE RESPONSIBILITY OF THE CONTRACTOR TO PROTECT OR CREATE HIS OWN PROTECTED CONTROL POINTS FROM THIS INFORMATION. THE CONTRACTOR IS RESPONSIBLE FOR ENSURING ALL LAYOUT POINTS ARE CONSISTENT WITH CONTROL INFORMATION. RESETTING OF DAMAGED OR MISSING LAYOUT MARKERS AS NECESSARY IS AT THE SOLE EXPENSE OF THE CONTRACTOR.

LEGEND

- PROPERTY LINE
- GRANITE CURB
- BAND PAVER AREA
- LIMIT OF DISTURBANCE
- DETECTABLE WARNING STRIP, TYP.
- BRICK PAVERS, TYP.
- BITUMINOUS CONCRETE, TYP.
- CONCRETE SIDEWALK, TYP.
- BENCH, TYP.; OVERALL QTY 30
- TRASH RECEPTACLE, TYP.; OVERALL QTY 19
- BIKE RACK, TYP.; OVERALL QTY 4
- EXISTING TREES TO REMAIN
- ELECTRICAL FEATURES (SEE ELEC. DWGS. EL-1 TO EL-4
- SITE LIGHTING TYPE 1
- SITE LIGHTING TYPE 2
- SITE LIGHTING TYPE 3
- SITE LIGHTING TYPE 5
- SITE LIGHTING TYPE 6
- SITE LIGHTING TYPE 7
- ELECTRICAL HANDHOLE

Project:

TOWN OF BRANFORD

MAIN STREET RECONSTRUCTION AND REHABILITATION
PROJECT NO.: L014-0002

1019 MAIN STREET
BRANFORD, CT 06405

Weston & Sampson

Weston & Sampson Engineers, Inc.
712 Brook Street, Suite 103
Rocky Hill, CT 06067
860.513.1473 800.SAMPSON
www.westonandsampson.com

Consultants:

Revisions:

No.	Date	Description

Seal:

COA:

Issued For:

BID SET

Scale:	AS NOTED
Date:	DECEMBER 13, 2024
Drawn By:	JT, JC, EW
Reviewed By:	RC
Approved By:	MJJ
W&S Project No.:	ENG21-0163
W&S File No.:	

Drawing Title:

LANDSCAPE IMPROVEMENTS PLAN
MAIN STREET
STA. 10+90 TO 16+75

Sheet Number:

LA-1

COPYRIGHT 2024 WESTON & SAMPSON

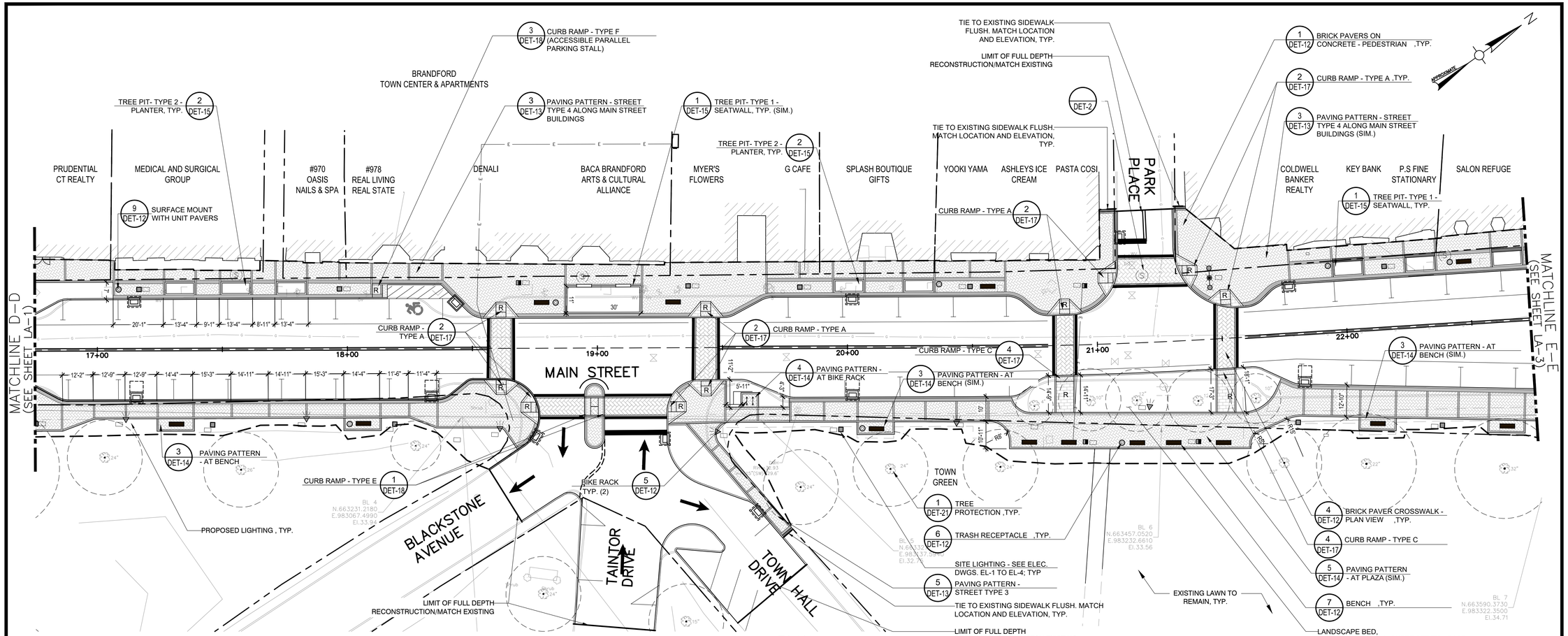

PLAN

SCALE: 1"=20'

0 20' 40' 60'

1 ENLARGEMENT PLAN B

SCALE:1"=20'-0"

LEGEND

REFER TO LA-1 FOR MATERIAL AND LAYOUT NOTES

- PROPERTY LINE
- GRANITE CURB
- BAND PAVER AREA
- LIMIT OF DISTURBANCE
- DETECTABLE WARNING STRIP, TYP.
- BRICK PAVERS, TYP.
- BITUMINOUS CONCRETE, TYP.
- CONCRETE SIDEWALK, TYP.
- BENCH, TYP.; OVERALL QTY 30
- TRASH RECEPTACLE, TYP.; OVERALL QTY 19
- BIKE RACK, TYP.; OVERALL QTY 4
- EXISTING TREES TO REMAIN

ELECTRICAL FEATURES (SEE ELEC. DWGS. EL-1 TO EL-4

- SITE LIGHTING TYPE 1
- SITE LIGHTING TYPE 2
- SITE LIGHTING TYPE 3
- SITE LIGHTING TYPE 5
- SITE LIGHTING TYPE 6
- SITE LIGHTING TYPE 7
- ELECTRICAL HANDHOLE

Project:

TOWN OF BRANFORD

MAIN STREET RECONSTRUCTION AND REHABILITATION
PROJECT NO.: L014-0002

1019 MAIN STREET
BRANFORD, CT 06405

Weston & Sampson

Weston & Sampson Engineers, Inc.
712 Brook Street, Suite 103
Rocky Hill, CT 06067
860.513.1473 800.SAMPSON
www.westonandsampson.com

Consultants:

Revisions:

No.	Date	Description

Seal:

COA:

Issued For:

BID SET

Scale:	AS NOTED
Date:	DECEMBER 13, 2024
Drawn By:	JT, JC, EW
Reviewed By:	RC
Approved By:	MJJ
W&S Project No.:	ENG21-0163
W&S File No.:	

Drawing Title:

LANDSCAPE IMPROVEMENTS PLAN
MAIN STREET
STA. 16+75 TO 22+75

Sheet Number:

LA-2

COPYRIGHT 2024 WESTON & SAMPSON

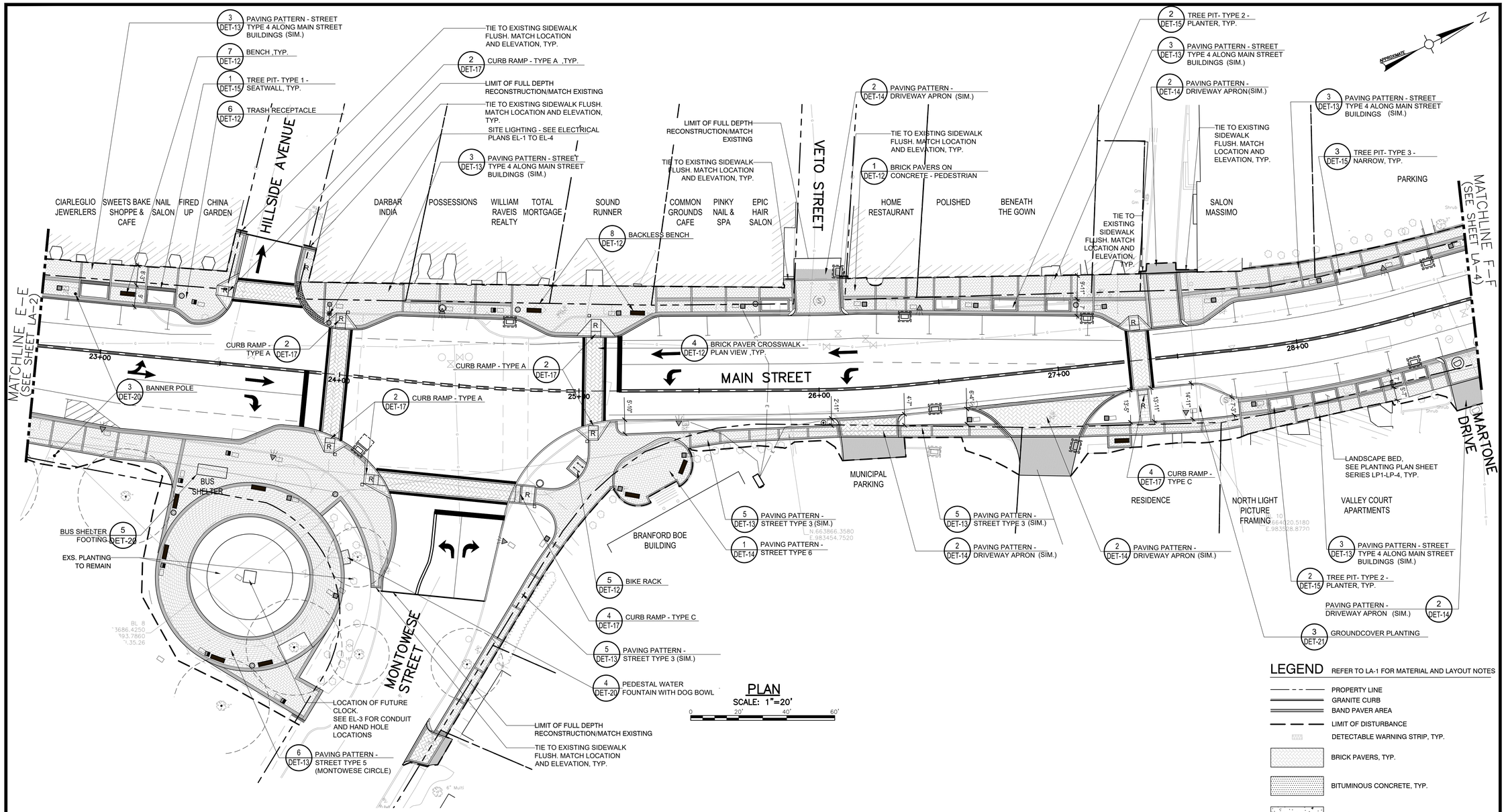

1 ENLARGEMENT PLAN C

SCALE:1"=20'-0"

LEGEND

REFER TO LA-1 FOR MATERIAL AND LAYOUT NOTES

- PROPERTY LINE
- GRANITE CURB
- BAND PAVER AREA
- LIMIT OF DISTURBANCE
- DETECTABLE WARNING STRIP, TYP.
- BRICK PAVERS, TYP.
- BITUMINOUS CONCRETE, TYP.
- CONCRETE SIDEWALK, TYP.
- BENCH, TYP.; OVERALL QTY 30
- TRASH RECEPTACLE, TYP.; OVERALL QTY 19
- BIKE RACK, TYP.; OVERALL QTY 4
- EXISTING TREES TO REMAIN
- ELECTRICAL FEATURES (SEE ELEC. DWGS. EL-1 TO EL-4
- SITE LIGHTING TYPE 1
- SITE LIGHTING TYPE 2
- SITE LIGHTING TYPE 3
- SITE LIGHTING TYPE 5
- SITE LIGHTING TYPE 6
- SITE LIGHTING TYPE 7
- ELECTRICAL HANDHOLE
- PEDESTRIAN PUSH BUTTON AND SIGN (SEE TRAFFIC CONTROL SIGNAL PLANS)
- TRAFFIC POLE AND SIGNAL (SEE TRAFFIC CONTROL SIGNAL PLANS)

Project:

TOWN OF BRANFORD

MAIN STREET RECONSTRUCTION AND REHABILITATION
PROJECT NO.: L014-0002

1019 MAIN STREET
BRANFORD, CT 06405

Weston & Sampson

Weston & Sampson Engineers, Inc.
712 Brook Street, Suite 103
Rocky Hill, CT 06067
860.513.1473 800.SAMPSON
www.westonandsampson.com

Consultants:

Revisions:

No.	Date	Description

Seal:

COA:

Issued For:

BID SET

Scale:	AS NOTED
Date:	DECEMBER 13, 2024
Drawn By:	JT, JC, EW
Reviewed By:	RC
Approved By:	MJJ
W&S Project No.:	ENG21-0163
W&S File No.:	

Drawing Title:

LANDSCAPE IMPROVEMENTS PLAN
MAIN STREET
STA. 22+75 TO 28+75

Sheet Number:

LA-3

COPYRIGHT 2024 WESTON & SAMPSON

p:\CT\branford\dwgs\14\15_main st reconstruction\CAD\Main\SHLA.dwg

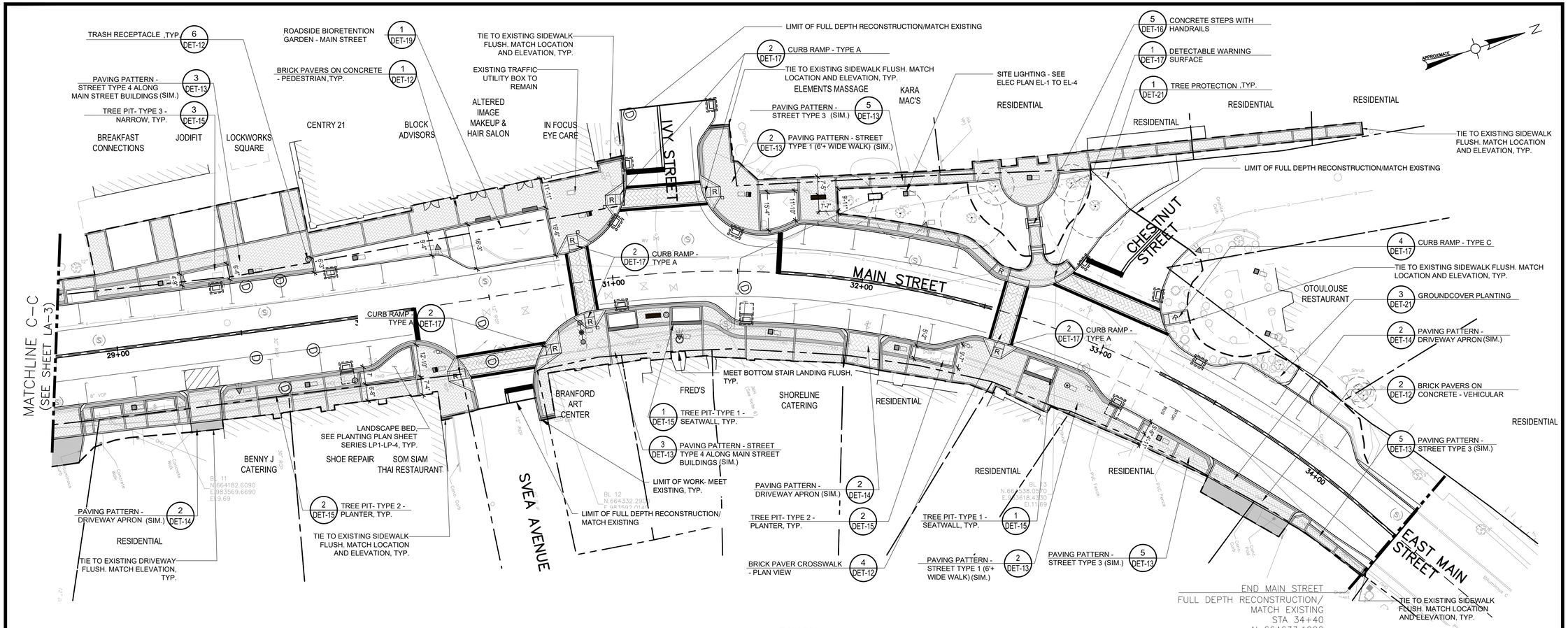

PLAN

SCALE: 1"=20'

0 20' 40' 60'

1 ENLARGEMENT PLAN D

SCALE:1"=20'-0"

LEGEND

REFER TO LA-1 FOR MATERIAL AND LAYOUT NOTES

- PROPERTY LINE
- GRANITE CURB
- BAND PAVER AREA
- LIMIT OF DISTURBANCE
- DETECTABLE WARNING STRIP, TYP.
- BRICK PAVERS, TYP.
- BITUMINOUS CONCRETE, TYP.
- CONCRETE SIDEWALK, TYP.
- BENCH, TYP.; OVERALL QTY 30
- TRASH RECEPTACLE, TYP.; OVERALL QTY 19
- BIKE RACK, TYP.; OVERALL QTY 4
- EXISTING TREES TO REMAIN
- ELECTRICAL FEATURES (SEE ELEC. DWGS. EL-1 TO EL-4
- SITE LIGHTING TYPE 1
- SITE LIGHTING TYPE 2
- SITE LIGHTING TYPE 3
- SITE LIGHTING TYPE 5
- SITE LIGHTING TYPE 6
- SITE LIGHTING TYPE 7
- ELECTRICAL HANDHOLE
- PEDESTRIAN PUSH BUTTON AND SIGN (SEE TRAFFIC CONTROL SIGNAL PLANS)
- TRAFFIC POLE AND SIGNAL (SEE TRAFFIC CONTROL SIGNAL PLANS)

Project:

TOWN OF BRANFORD

MAIN STREET RECONSTRUCTION AND REHABILITATION
PROJECT NO.: L014-0002

1019 MAIN STREET
BRANFORD, CT 06405

Weston & Sampson

Weston & Sampson Engineers, Inc.
712 Brook Street, Suite 103
Rocky Hill, CT 06067
860.513.1473 800.SAMPSON
www.westonandsampson.com

Consultants:

Revisions:

No.	Date	Description

Seal:

COA:

Issued For:

BID SET

Scale:	AS NOTED
Date:	DECEMBER 13, 2024
Drawn By:	JT, JC, EW
Reviewed By:	RC
Approved By:	MJJ
W&S Project No.:	ENG21-0163
W&S File No.:	

Drawing Title:

LANDSCAPE IMPROVEMENTS PLAN
MAIN STREET
STA. 28+75 TO 34+40

Sheet Number:

LA-4

COPYRIGHT 2024 WESTON & SAMPSON

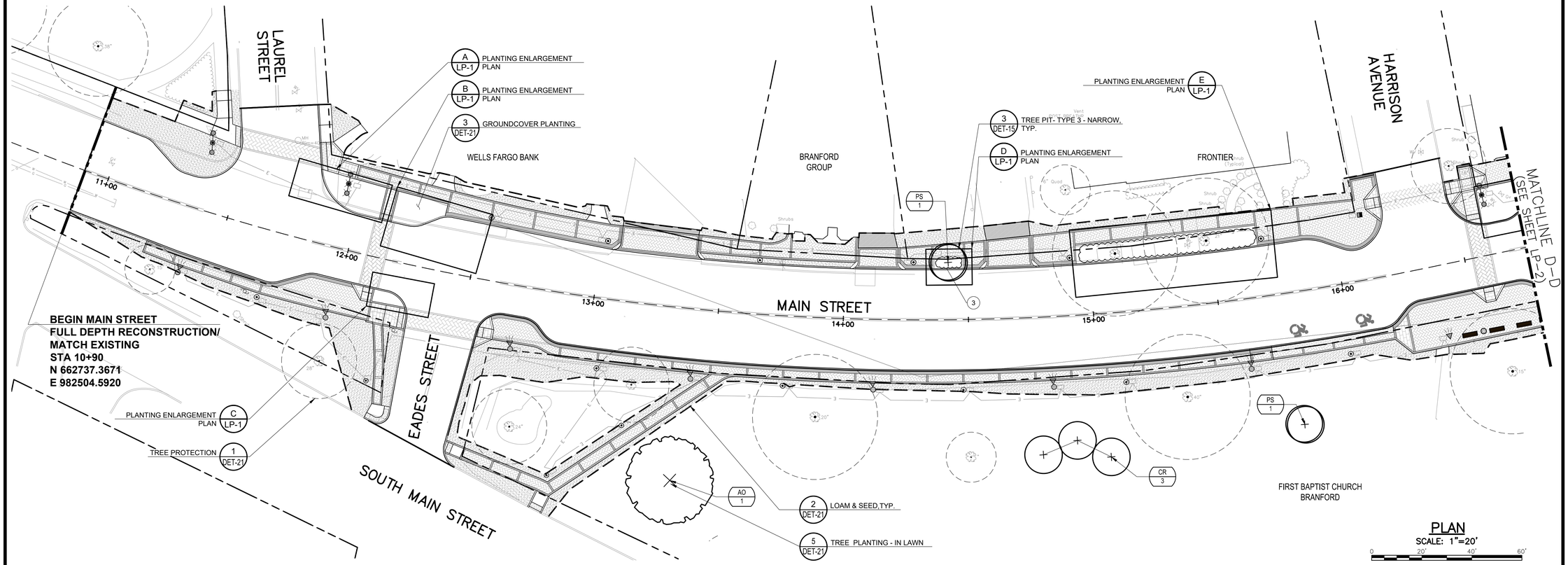

PLAN

SCALE: 1"=20'

0 20' 40' 60'

1 ENLARGEMENT PLAN

SCALE:1"=20'-0"

PLANT QUANTITIES ARE REPRESENTATIVE FOR PLANTS ON SHEET LP-1 ONLY

PLANT SCHEDULE LP-1

CODE	QTY	BOTANICAL NAME	COMMON NAME	SIZE	CONTAINER	REMARKS
TREES						
AO	1	ACER RUBRUM `OCTOBER GLORY`	OCTOBER GLORY RED MAPLE	2.5"-3" CAL.	B&B	6'H MIN. BRANCHING HT., MATCHING SPECIMENS
CR	3	CORNUS X RUTGERSENSIS 'RUTGAN'	STELLAR PINK® DOGWOOD	2.5"-3" CAL.	B&B	MATCHING SPECIMENS
PS	2	PRUNUS SARGENTII `JFS-KW58`	PINK FLAIR® SARGENT CHERRY	2"-2.5" CAL.	B&B	6'H MIN. BRANCHING HT., MATCHING SPECIMENS
SHRUBS						
HN	33	HELENIUM AUTUMNALE `FUEGO`	MARIACHI™ FUEGO SNEEZEWEED	#1	CONT.	24" O.C.
SH	113	SPOROBOLUS HETEROLEPIS 'TARA'	TARA PRAIRIE DROPSEED	#1	CONT.	24" O.C.

CODE	QTY	BOTANICAL NAME	COMMON NAME	SIZE	CONTAINER	SPACING	REMARKS
GROUND COVERS							
RG	139	RHUS AROMATICA 'GRO-LOW'	GRO-LOW FRAGRANT SUMAC	#1	CONTAINER	24" o.c.	

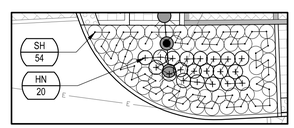

A PLANTING ENLARGEMENT PLAN

SCALE:1"=10'-0"

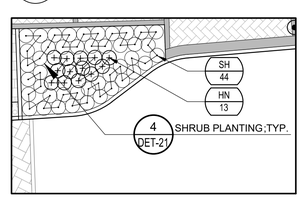

B PLANTING ENLARGEMENT PLAN

SCALE:1"=10'-0"

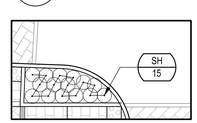

C PLANTING ENLARGEMENT PLAN

SCALE:1"=10'-0"

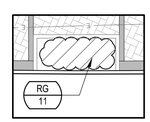

D PLANTING ENLARGEMENT PLAN

SCALE:1"=10'-0"

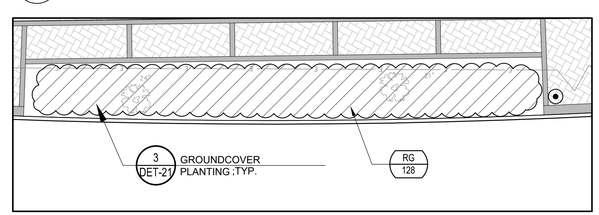

E PLANTING ENLARGEMENT PLAN

SCALE:1"=10'-0"

LEGEND

- PROPERTY LINE
- GRANITE CURB
- LIMIT OF DISTURBANCE
- LOAM AND SEED AT ALL DISTURBED AREAS, TYP.
- EXISTING TREES
- 1 — 1 DET-15 TREE PIT- TYPE 1 - SEATWALL, TYP.
- 2 — 2 DET-15 TREE PIT- TYPE 2 - PLANTER, TYP.
- 3 — 3 DET-15 TREE PIT- TYPE 3 - NARROW, TYP.

Project:

TOWN OF BRANFORD

MAIN STREET
RECONSTRUCTION AND
REHABILITATION
PROJECT NO.: L014-0002

1019 MAIN STREET
BRANFORD, CT 06405

Weston & Sampson

Weston & Sampson Engineers, Inc.
712 Brook Street, Suite 103
Rocky Hill, CT 06067
860.513.1473 800.SAMPSON
www.westonandsampson.com

Consultants:

Revisions:

No.	Date	Description

Seal:

COA:

Issued For:

BID SET

Scale:	AS NOTED
Date:	DECEMBER 13, 2024
Drawn By:	NSD
Reviewed By:	RC
Approved By:	JT, JC, EW, EB MJJ
W&S Project No.:	ENG21-0163
W&S File No.:	

Drawing Title:

PLANTING PLAN
MAIN STREET
STA. 10+90 TO 16+75

Sheet Number:

LP-1

COPYRIGHT 2024 WESTON & SAMPSON

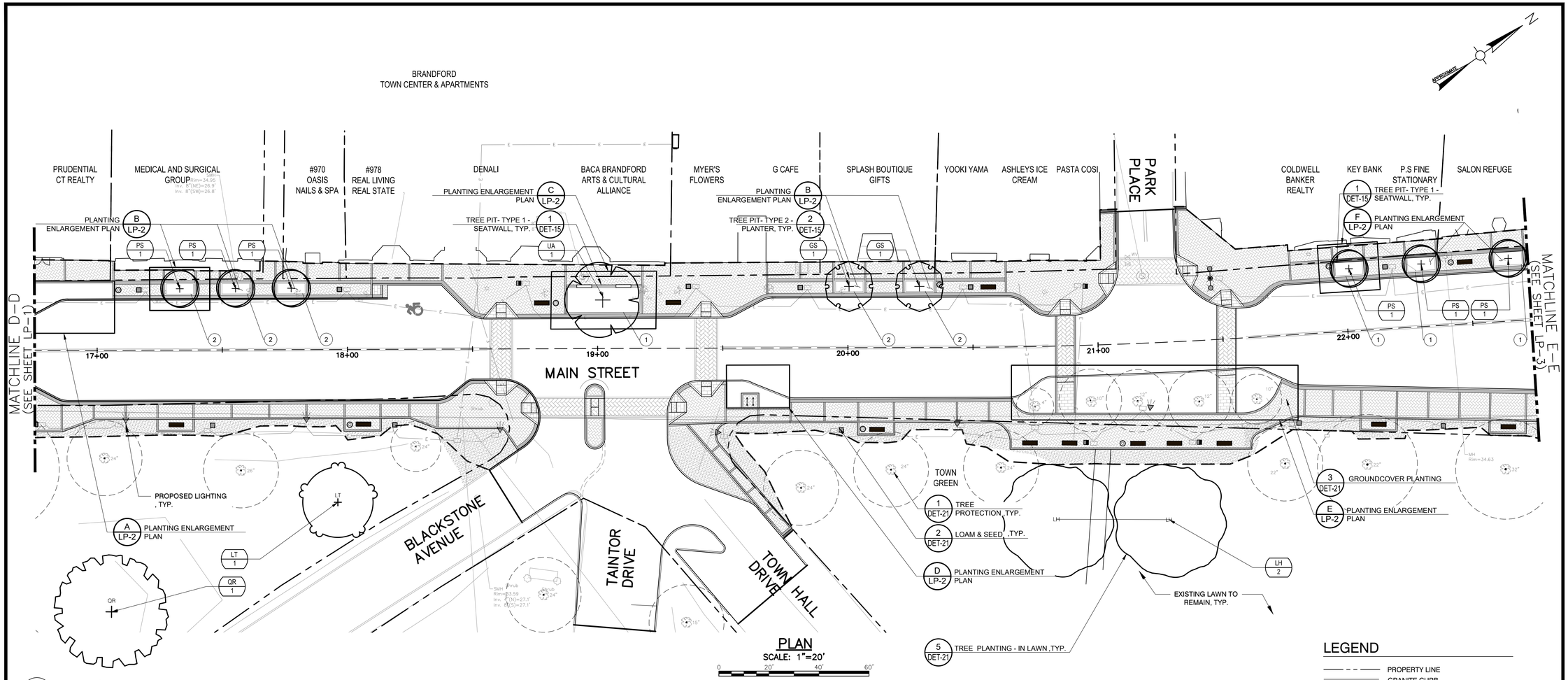

PLAN

SCALE: 1"=20'

0 20' 40' 60'

1 ENLARGEMENT PLAN

SCALE:1"=20'-0"

PLANT QUANTITIES ARE REPRESENTATIVE FOR PLANTS ON SHEET LP-2 ONLY

PLANT SCHEDULE LP-2

CODE	QTY	BOTANICAL NAME	COMMON NAME	SIZE	CONTAINER	REMARKS
TREES						
GS	2	GLEDITSIA TRIACANTHOS INERMIS `SHADEMASTER`	SHADEMASTER HONEY LOCUST	2.5"-3" CAL.		6'H MIN. BRANCHING HT.
LH	2	LIQUIDAMBAR STYRACIFLUA `HAPPDELL`	HAPPIDAZE® SWEET GUM	2.5"-3" CAL.		6' MIN. BRANCHING HT.
LT	1	LIRIODENDRON TULIPIFERA	TULIP POPLAR	2.5"-3" CAL.		6' MIN. BRANCHING HT.
PS	6	PRUNUS SARGENTII `JFS-KW58`	PINK FLAIR® SARGENT CHERRY	2"-2.5" CAL.	B&B	6'H MIN. BRANCHING HT., MATCHING SPECIMENS
QR	1	QUERCUS RUBRA	RED OAK	2.5"-3" CAL.		6' MIN. BRANCHING HT.
UA	1	ULMUS AMERICANA `PRINCETON`	PRINCETON AMERICAN ELM	2.5"-3" CAL.		6'H MIN. BRANCHING HT.
SHRUBS						
AG	41	ARONIA MELANOCARPA 'UCONNAM012'	GROUND HUG® BLACK CHOKEBERRY	#2	CONT.	SPACING AS SHOWN
HN	47	HELENIUM AUTUMNALE `FUEGO`	MARIACHI™ FUEGO SNEEZEWEED	#1	CONT.	24" O.C.
SH	189	SPOROBOLUS HETEROLEPIS 'TARA'	TARA PRAIRIE DROPSEED	#1	CONT.	24" O.C.

CODE	QTY	BOTANICAL NAME	COMMON NAME	SIZE	CONTAINER	SPACING	REMARKS
GROUND COVERS							
AG2	378	ARONIA MELANOCARPA 'UCONNAM012'	GROUND HUG® BLACK CHOKEBERRY	#2	CONTAINER	24" o.c.	

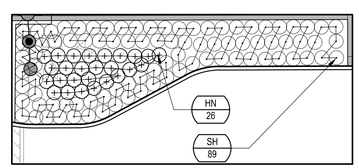

A PLANTING ENLARGEMENT PLAN

SCALE:1"=10'-0"

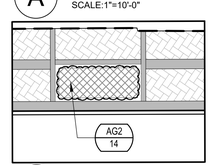

B PLANTING ENLARGEMENT PLAN

SCALE:1"=10'-0"

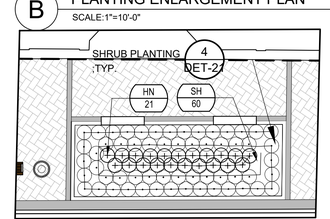

C PLANTING ENLARGEMENT PLAN

SCALE:1"=10'-0"

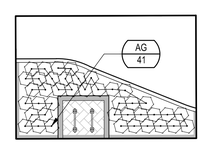

D PLANTING ENLARGEMENT PLAN

SCALE:1"=10'-0"

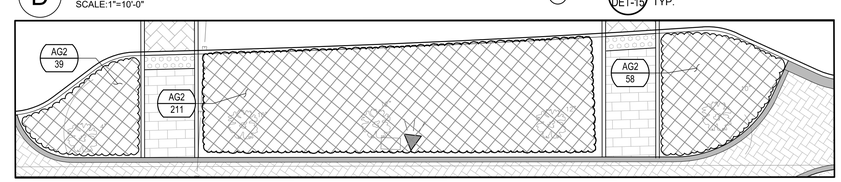

E PLANTING ENLARGEMENT PLAN

SCALE:1"=10'-0"

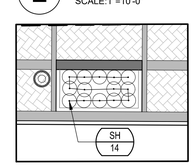

F PLANTING ENLARGEMENT PLAN

SCALE:1"=10'-0"

LEGEND

- PROPERTY LINE
- GRANITE CURB
- LIMIT OF DISTURBANCE
- LOAM AND SEED AT ALL DISTURBED AREAS, TYP.
- EXISTING TREES
- (1) 1 DET-15 TREE PIT- TYPE 1 - SEATWALL, TYP.
- (2) 2 DET-15 TREE PIT- TYPE 2 - PLANTER, TYP.
- (3) 3 DET-15 TREE PIT- TYPE 3 - NARROW, TYP.

Project:

TOWN OF BRANFORD

MAIN STREET RECONSTRUCTION AND REHABILITATION
PROJECT NO.: L014-0002

1019 MAIN STREET
BRANFORD, CT 06405

Weston & Sampson

Weston & Sampson Engineers, Inc.
712 Brook Street, Suite 103
Rocky Hill, CT 06067
860.513.1473 800.SAMPSON
www.westonandsampson.com

Consultants:

Revisions:

No.	Date	Description

Seal:

COA:

Issued For:

BID SET

Scale:	AS NOTED
Date:	DECEMBER 13, 2024
Drawn By:	JT, JC, EW, EB
Reviewed By:	RC
Approved By:	MJJ
W&S Project No.:	ENG21-0163
W&S File No.:	

Drawing Title:

PLANTING PLAN
MAIN STREET
STA. 16+75 TO 22+75

Sheet Number:

LP-2

COPYRIGHT 2024 WESTON & SAMPSON

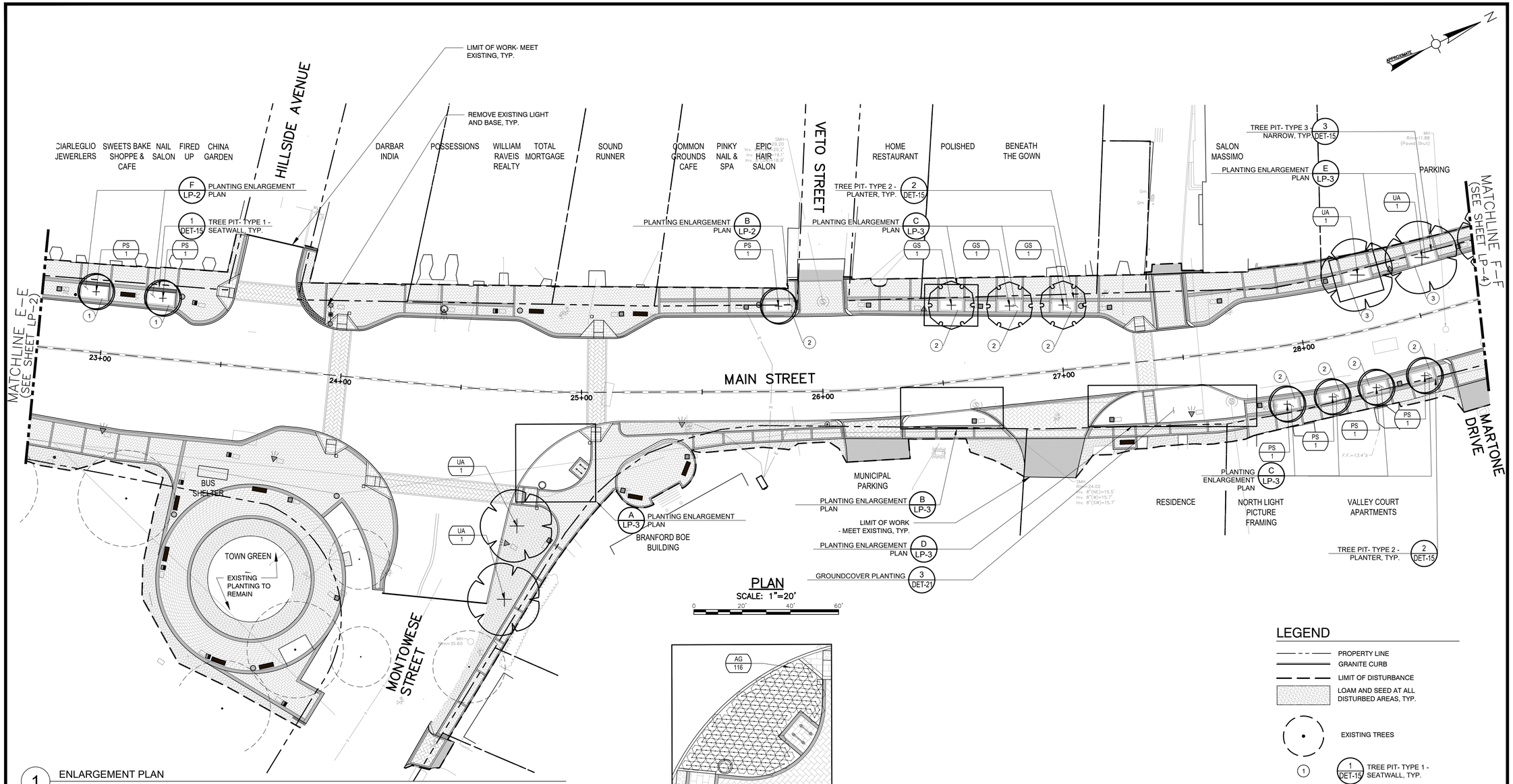

1 ENLARGEMENT PLAN
SCALE:1"=20'-0"

PLANT QUANTITIES ARE REPRESENTATIVE FOR PLANTS ON SHEET LP-3 ONLY

PLANT SCHEDULE LP-3

CODE	QTY	BOTANICAL NAME	COMMON NAME	SIZE	CONTAINER	REMARKS
TREES						
GS	3	GLEDITSIA TRIACANTHOS INERMIS `SHADEMASTER`	SHADEMASTER HONEY LOCUST	2.5"-3" CAL.		6'H MIN. BRANCHING HT.
PS	7	PRUNUS SARGENTII `JFS-KW58`	PINK FLAIR® SARGENT CHERRY	2"-2.5" CAL.	B&B	6'H MIN. BRANCHING HT., MATCHING SPECIMENS
UA	4	ULMUS AMERICANA `PRINCETON`	PRINCETON AMERICAN ELM	2.5"-3" CAL.		6'H MIN. BRANCHING HT.
SHRUBS						
AG	117	ARONIA MELANOCARPA 'UCONNAM012'	GROUND HUG® BLACK CHOKEBERRY	#2	CONT.	SPACING AS SHOWN
SH	112	SPOROBOLUS HETEROLEPIS 'TARA'	TARA PRAIRIE DROPSEED	#1	CONT.	24" O.C.

CODE	QTY	BOTANICAL NAME	COMMON NAME	SIZE	CONTAINER	SPACING	REMARKS
GROUND COVERS							
AG2	91	ARONIA MELANOCARPA 'UCONNAM012'	GROUND HUG® BLACK CHOKEBERRY	#2	CONTAINER	24" o.c.	
RG	140	RHUS AROMATICA 'GRO-LOW'	GRO-LOW FRAGRANT SUMAC	#1	CONTAINER	24" o.c.	

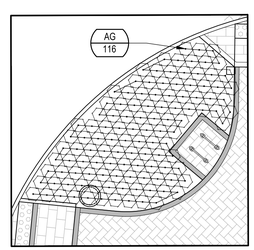

A PLANTING ENLARGEMENT PLAN
SCALE:1"=10'-0"

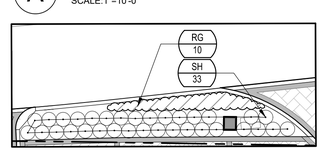

B PLANTING ENLARGEMENT PLAN
SCALE:1"=10'-0"

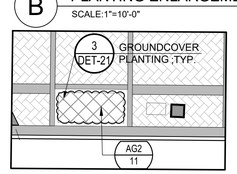

C PLANTING ENLARGEMENT PLAN
SCALE:1"=10'-0"

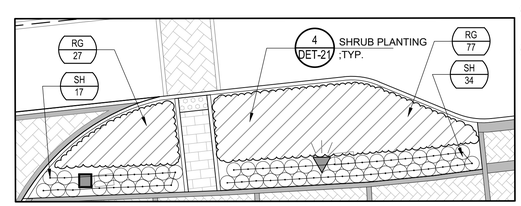

D PLANTING ENLARGEMENT PLAN
SCALE:1"=10'-0"

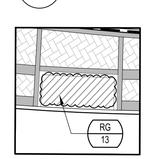

E PLANTING ENLARGEMENT PLAN
SCALE:1"=10'-0"

LEGEND

- PROPERTY LINE
- GRANITE CURB
- LIMIT OF DISTURBANCE
- LOAM AND SEED AT ALL DISTURBED AREAS, TYP.
- EXISTING TREES
- (1) 1 DET-15 TREE PIT- TYPE 1 - SEATWALL, TYP.
- (2) 2 DET-15 TREE PIT- TYPE 2 - PLANTER, TYP.
- (3) 3 DET-15 TREE PIT- TYPE 3 - NARROW, TYP.

Project:
TOWN OF BRANFORD

MAIN STREET RECONSTRUCTION AND REHABILITATION
PROJECT NO.: L014-0002

1019 MAIN STREET
BRANFORD, CT 06405

Weston & Sampson
Weston & Sampson Engineers, Inc.
712 Brook Street, Suite 103
Rocky Hill, CT 06067
860.513.1473 800.SAMPSON
www.westonandsampson.com

Consultants:

Revisions:

No.	Date	Description

Seal:

COA:

Issued For:
BID SET

Scale:	AS NOTED
Date:	DECEMBER 13, 2024
Drawn By:	JT, JC, EW, EB
Reviewed By:	RC
Approved By:	MJJ
W&S Project No.:	ENG21-0163
W&S File No.:	

Drawing Title:
PLANTING PLAN
MAIN STREET
STA. 22+75 TO 28+75

Sheet Number:
LP-3

COPYRIGHT 2024 WESTON & SAMPSON

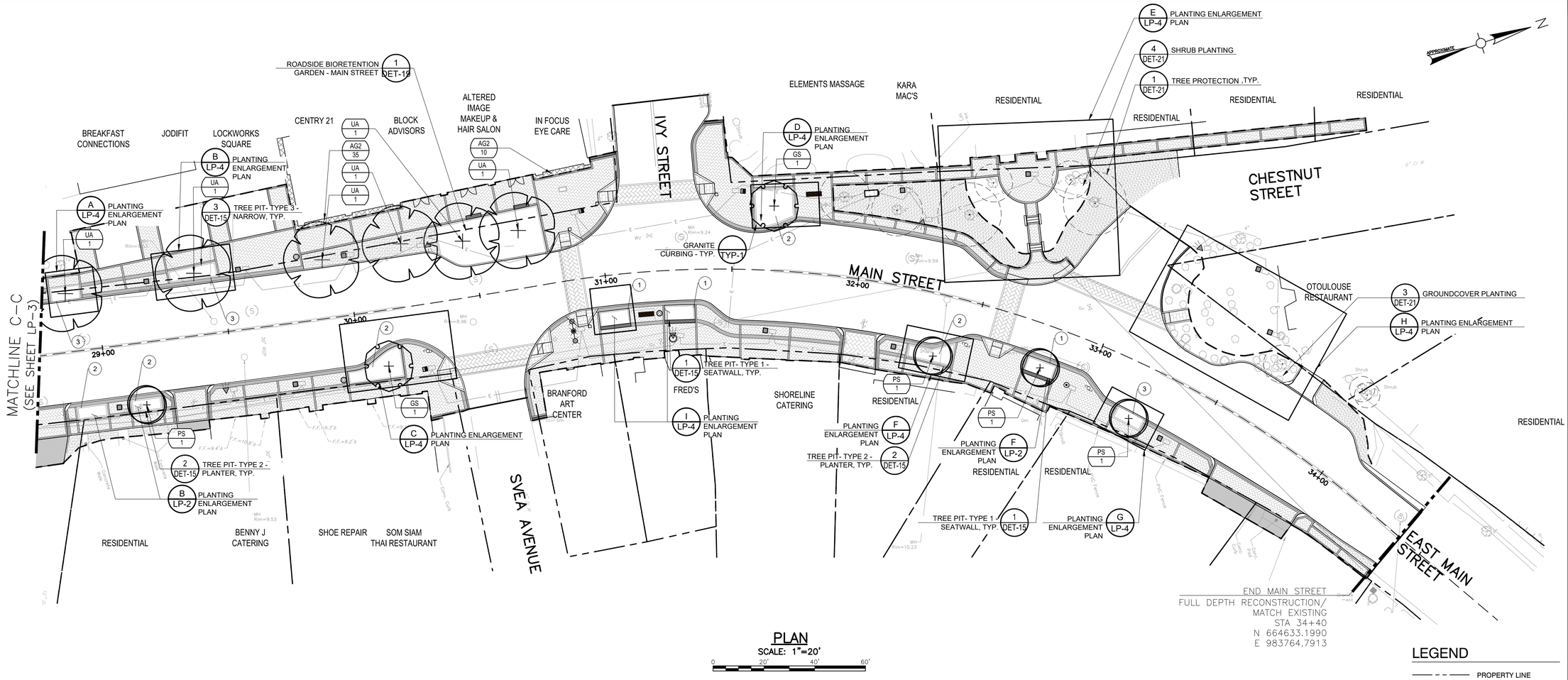

PLAN

SCALE: 1"=20'

0 20' 40' 60'

1 ENLARGEMENT PLAN

SCALE:1"=20'-0"

PLANT QUANTITIES ARE REPRESENTATIVE FOR PLANTS ON SHEET LP-4 ONLY
SEE DET-19 FOR MAIN STREET BIORETENTION GARDEN PLANT QUANTITIES

PLANT SCHEDULE LP-4

CODE	QTY	BOTANICAL NAME	COMMON NAME	SIZE	CONTAINER	REMARKS
TREES						
GS	2	GLEDITSIA TRIACANTHOS INERMIS `SHADEMASTER`	SHADEMASTER HONEY LOCUST	2.5"-3" CAL.		6'H MIN. BRANCHING HT.
PS	4	PRUNUS SARGENTII `JFS-KW58`	PINK FLAIR® SARGENT CHERRY	2"-2.5" CAL.	B&B	6'H MIN. BRANCHING HT., MATCHING SPECIMENS
UA	6	ULMUS AMERICANA `PRINCETON`	PRINCETON AMERICAN ELM	2.5"-3" CAL.		6'H MIN. BRANCHING HT.
SHRUBS						
AG	185	ARONIA MELANOCARPA 'UCONNAM012'	GROUND HUG® BLACK CHOKEBERRY	#2	CONT.	SPACING AS SHOWN
CH	15	CLETHRA ALNIFOLIA 'HUMMINGBIRD'	HUMMINGBIRD SUMMERSWEET	24"-30" HT.	CONT.	SPACING AS SHOWN
HN	14	HELENIUM AUTUMNALE `FUEGO`	MARIACHI™ FUEGO SNEEZEWEED	#1	CONT.	24" O.C.
SH	175	SPOROBOLUS HETEROLEPIS 'TARA'	TARA PRAIRIE DROPSEED	#1	CONT.	24" O.C.

CODE	QTY	BOTANICAL NAME	COMMON NAME	SIZE	CONTAINER	SPACING	REMARKS
GROUND COVERS							
AG2	156	ARONIA MELANOCARPA 'UCONNAM012'	GROUND HUG® BLACK CHOKEBERRY	#2	CONTAINER	24" o.c.	
RG	41	RHUS AROMATICA 'GRO-LOW'	GRO-LOW FRAGRANT SUMAC	#1	CONTAINER	24" o.c.	

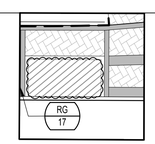

A PLANTING ENLARGEMENT PLAN
SCALE:1"=10'-0"

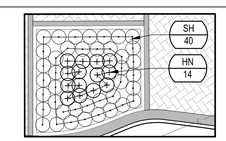

D PLANTING ENLARGEMENT PLAN
SCALE:1"=10'-0"

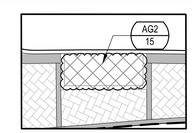

G PLANTING ENLARGEMENT PLAN
SCALE:1"=10'-0"

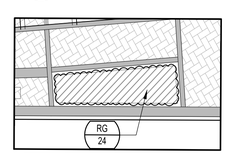

B PLANTING ENLARGEMENT PLAN
SCALE:1"=10'-0"

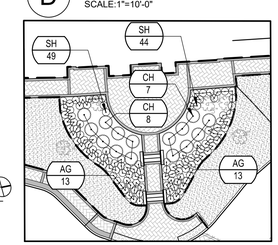

E PLANTING ENLARGEMENT PLAN
SCALE:1"=20'-0"

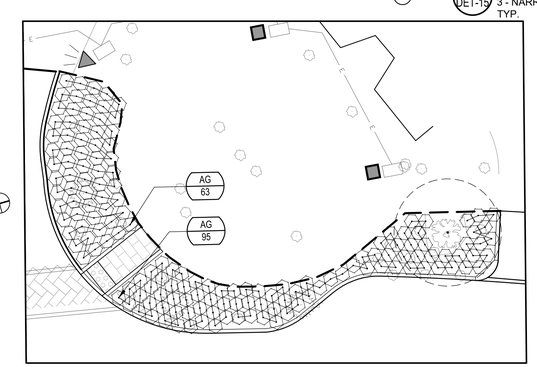

H PLANTING ENLARGEMENT PLAN
SCALE:1"=10'-0"

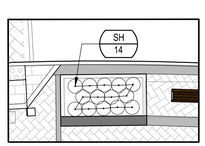

I PLANTING ENLARGEMENT PLAN
SCALE:1"=10'-0"

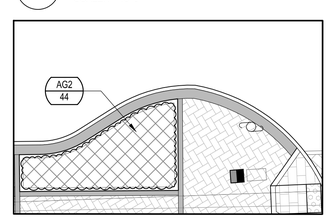

C PLANTING ENLARGEMENT PLAN
SCALE:1"=10'-0"

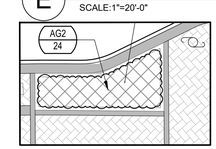

F PLANTING ENLARGEMENT PLAN
SCALE:1"=10'-0"

LEGEND

- PROPERTY LINE
- GRANITE CURB
- LIMIT OF DISTURBANCE
- LOAM AND SEED AT ALL DISTURBED AREAS, TYP.
- EXISTING TREES
- 1 — 1 DET-15 TREE PIT- TYPE 1 - SEATWALL, TYP.
- 2 — 2 DET-15 TREE PIT- TYPE 2 - PLANTER, TYP.
- 3 — 3 DET-15 TREE PIT- TYPE 3 - NARROW, TYP.

Project:

TOWN OF BRANFORD

MAIN STREET RECONSTRUCTION AND REHABILITATION
PROJECT NO.: L014-0002

1019 MAIN STREET
BRANFORD, CT 06405

Weston & Sampson

Weston & Sampson Engineers, Inc.
712 Brook Street, Suite 103
Rocky Hill, CT 06067
860.513.1473 800.SAMPSON
www.westonandsampson.com

Consultants:

Revisions:

No.	Date	Description

Seal:

COA:

Issued For:

BID SET

Scale:	AS NOTED
Date:	DECEMBER 13, 2024
Drawn By:	JT, JC, EW, EB
Reviewed By:	RC
Approved By:	MJJ
W&S Project No.:	ENG21-0163
W&S File No.:	

Drawing Title:

PLANTING PLAN
MAIN STREET
STA. 28+75 TO 34+40

Sheet Number:

LP-4

COPYRIGHT 2024 WESTON & SAMPSON

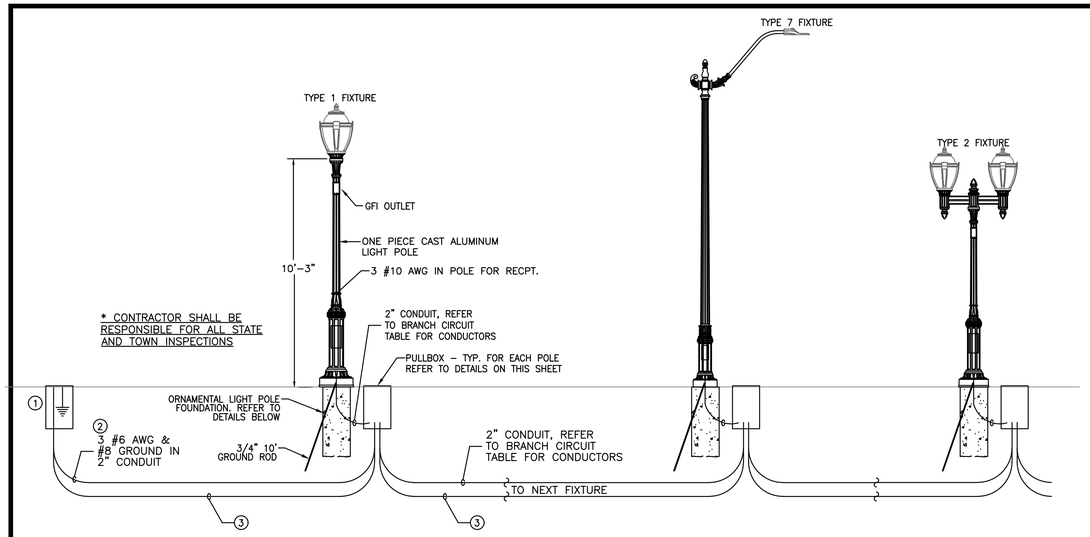

ELECTRICAL 1-LINE DIAGRAM (TYPICAL)

SCALE: NOT TO SCALE

NOTES:

1. TIE TO EXISTING BRANCH CIRCUIT IN EXISTING HANDHOLE.
2. GENERAL BRANCH CIRCUIT WIRING FOR RECEPTACLE SHALL BE MINIMUM #6 AWG. REFER TO BRANCH CIRCUIT TABLE FOR LIGHTING BRANCH CIRCUIT DESIGNATION, CONDUIT SIZE, CONDUCTORS SIZE AND ADJUSTMENTS TO ALLOW FOR VOLTAGE DROP.
3. PROVIDE ONE SPARE 2" CONDUIT WITH PULLSTRING PARALLELING ALL SPECIFIED BRANCH CIRCUIT RUNS FROM SERVICE ENCLOSURES TO PULLBOXES.

GENERAL NOTES:

1. THE CONTRACTOR SHALL COORDINATE THE INSTALLATION OF NEW LIGHTING WITH THE REMOVAL OF THE EXISTING SUCH THAT ILLUMINATION OF THE STREET IS MAINTAINED DURING CONSTRUCTION. CONTRACTOR IS RESPONSIBLE FOR REMOVAL OF ALL EXISTING ROADWAY ILLUMINATION.
2. ALL SERVICE CONDUITS SHALL BE RIGID GALVANIZED STEEL UNLESS OTHERWISE NOTED.
3. ROUTE CONDUITS TO AVOID CONFLICT WITH EXISTING AND PROPOSED STRUCTURES AND TREES.
4. LUMINAIRES UTILIZE AN IES TYPE III DISTRIBUTION, WHICH SHALL BE PARALLEL TO THE CURB LINE.
5. 6' BRACKET ARMS, LUMINAIRES, PEDESTRIAN BRACKET HANGERS, BANNER ARMS AND GFI OUTLETS SHALL BE PAID FOR UNDER ORNAMENTAL LIGHT POLE ACCESSORIES. REFER TO THE LIGHTING DETAILS AND SPECIFICATIONS FOR POLE ACCESSORY REQUIREMENTS.

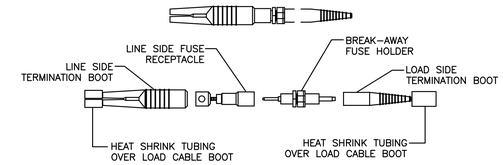

BREAK-AWAY FUSE HOLDER

SCALE: NONE

NOTES:

1. INSTALL IN ADJACENT PULL BOX INSTEAD OF IN THE POLE WIRING COMPARTMENT.

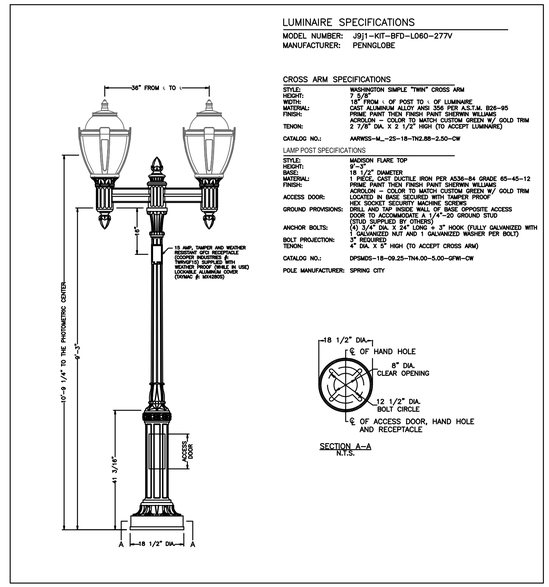

LUMINAIRE SPECIFICATIONS

MODEL NUMBER: J9J1-KIT-BFD-LO60-277V
MANUFACTURER: PENNGLOBE

CROSS ARM SPECIFICATIONS

STYLE:	WASHINGTON SIMPLE "TWIN" CROSS ARM
HEIGHT:	7 5/8"
WIDTH:	18" FROM ℄ OF POST TO ℄ OF LUMINAIRE
MATERIAL:	CAST ALUMINUM ALLOY AMS 356 PER A.S.T.M. B26-95
FINISH:	PRIME PAINT THEN FINISH PAINT SHERWIN WILLIAMS ACRYLON – COLOR TO MATCH CUSTOM GREEN W/ GOLD TRIM
TENON:	2 7/8" DIA. X 2 1/2" HIGH (TO ACCEPT LUMINAIRE)
CATALOG NO.:	AARWSS-W,-2S-18-TN2.88-2.50-CW

LAMP POST SPECIFICATIONS

STYLE:	MADISON FLARE TOP
HEIGHT:	9'-3"
BASE:	18 1/2" DIAMETER
MATERIAL:	1 PIECE, CAST DUCTILE IRON PER A536-84 GRADE 65-45-12
FINISH:	PRIME PAINT THEN FINISH PAINT SHERWIN WILLIAMS ACRYLON – COLOR TO MATCH CUSTOM GREEN W/ GOLD TRIM
ACCESS DOOR:	LOCATED IN BASE SECURED WITH TAMPER PROOF HEX SOCKET SECURITY MACHINE SCREWS
GROUND PROVISIONS:	DRILL AND TAP INSIDE WALL OF BASE OPPOSITE ACCESS DOOR TO ACCOMMODATE A 1/4"-20 GROUND STUD (STUD SUPPLIED BY OTHERS)
ANCHOR BOLTS:	(4) 3/4" DIA. X 24" LONG + 3" HOOK (FULLY GALVANIZED WITH 1 GALVANIZED NUT AND 1 GALVANIZED WASHER PER BOLT)
BOLT PROJECTION:	3" REQUIRED
TENON:	4" DIA. X 2" HIGH (TO ACCEPT CROSS ARM)
CATALOG NO.:	DPSMDS-18-09.25-TN4.00-5.00-GFWI-CW
POLE MANUFACTURER:	SPRING CITY

SECTION A-A
N.T.S.

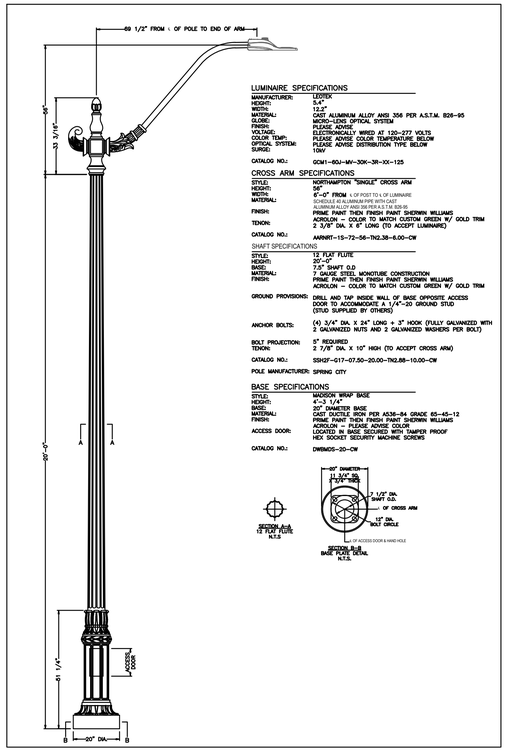

LUMINAIRE SPECIFICATIONS

MANUFACTURER:	LEDTEK
HEIGHT:	5.4"
WIDTH:	13.2"
MATERIAL:	CAST ALUMINUM ALLOY ANSI 356 PER A.S.T.M. B26-95
GLOBE:	MICRO-LENS OPTICAL SYSTEM
FINISH:	ACRYLON COLOR
VOLTAGE:	ELECTRONICALLY WIRED AT 120-277 VOLTS
COLOR TEMP:	PLEASE ADVISE COLOR TEMPERATURE BELOW
OPTICAL SYSTEM:	PLEASE ADVISE DISTRIBUTION TYPE BELOW
SURGE:	10kV
CATALOG NO.:	GCM1-40U-4H-30K-3R-XX-125

CROSS ARM SPECIFICATIONS

STYLE:	NORTHAMPTON "SINGLE" CROSS ARM
HEIGHT:	5'6"
WIDTH:	6'-0" FROM ℄ OF POST TO ℄ OF LUMINAIRE
MATERIAL:	SCHEDULE 40 ALUMINUM PIPE WITH CAST ALUMINUM ALLOY AMSI 356 PER A.S.T.M. B26-95
FINISH:	PRIME PAINT THEN FINISH PAINT SHERWIN WILLIAMS ACRYLON – COLOR TO MATCH CUSTOM GREEN W/ GOLD TRIM
TENON:	2 3/8" DIA. X 8" LONG (TO ACCEPT LUMINAIRE)
CATALOG NO.:	AARNRT-15-72-56-TN2.38-6.00-CW

SHAFT SPECIFICATIONS

STYLE:	12- FLAT FLUTE
HEIGHT:	20'-0"
WIDTH:	7 1/2" SHAFT O.D
MATERIAL:	11-GAUGE STEEL MONOTUBE CONSTRUCTION
FINISH:	PRIME PAINT THEN FINISH PAINT SHERWIN WILLIAMS ACRYLON – COLOR TO MATCH CUSTOM GREEN W/ GOLD TRIM
GROUND PROVISIONS:	DRILL AND TAP INSIDE WALL OF BASE OPPOSITE ACCESS DOOR TO ACCOMMODATE A 1/4"-20 GROUND STUD (STUD SUPPLIED BY OTHERS)
ANCHOR BOLTS:	(4) 3/4" DIA. X 24" LONG + 3" HOOK (FULLY GALVANIZED WITH 2 GALVANIZED NUTS AND 2 GALVANIZED WASHERS PER BOLT)
BOLT PROJECTION:	5" REQUIRED
TENON:	2 7/8" DIA. X 10" HIGH (TO ACCEPT CROSS ARM)
CATALOG NO.:	SSH27-G17-07.50-20.00-TN2.88-10.00-CW
POLE MANUFACTURER:	SPRING CITY

BASE SPECIFICATIONS

STYLE:	MADISON WRAP BASE
HEIGHT:	4'-3 1/4"
BASE:	20" DIAMETER BASE
MATERIAL:	1 PIECE, CAST DUCTILE IRON PER A536-84 GRADE 65-45-12
FINISH:	PRIME PAINT THEN FINISH PAINT SHERWIN WILLIAMS ACRYLON – PLEASE ADVISE COLOR
ACCESS DOOR:	LOCATED IN BASE SECURED WITH TAMPER PROOF HEX SOCKET SECURITY MACHINE SCREWS
CATALOG NO.:	DWBMDS-20-CW

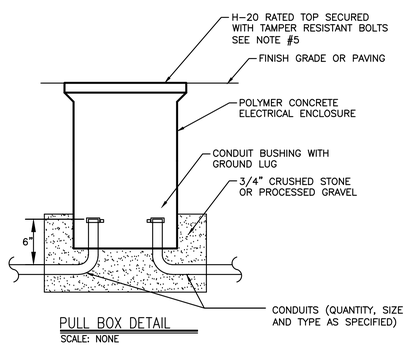

PULL BOX DETAIL
SCALE: NONE

NOTES:

1. PULLBOXES SHALL BE SET ON A 12" BED OF COMPACTED CRUSHED STONE OR PROCESSED GRAVEL. BED SHALL EXTEND 6" BEYOND EACH WALL (i.e. 13"x24" BOX, PAD SHALL BE 25"x36"). THE EXTERIOR OF THE BOTTOM BOX SHALL BE BACKFILLED WITH 12" OF COMPACTED BED MATERIAL.
2. PULLBOXES SHALL BE OPEN BOTTOM TYPE, WITH NOMINAL DIMENSION OF 19"W x 32"L x 30"D WITH A 1 1/4" BOTTOM EDGE. TOP SHALL BE DESIGNED WITH BOLT HOLES, PULL SLOT AND CUSTOM LOGO. BOX COLOR SHALL BE SELECTED FROM MANUFACTURER'S STANDARD COLORS. PULLBOXES SHALL BE UL LISTED H-20. HAND HOLE COVERS SHALL BE SECURED WITH STAINLESS STEEL PENTA-HEAD BOLTS.
3. PROVIDE PRODUCT DATA SHEETS, WHICH INDICATE DIMENSIONS, DESIGN INFORMATION, LOAD RATING DATA, MATERIAL INFORMATION, ALONG WITH MANUFACTURER'S INFORMATION FOR REVIEW. SUBMIT PRODUCT SAMPLES, IN MANUFACTURER'S STANDARD COLORS TO ALLOW FOR COLOR SELECTION. PRODUCT SAMPLES SHALL HAVE NOMINAL DIMENSIONS OF 4"x6".
4. WHERE REQUIRED, CONTRACTOR SHALL FIELD DRILL PULLBOXES TO INSTALL CONDUITS FOR LIGHT POLES. AFTER INSTALLATION OF CONDUIT, HOLES SHALL BE SEALED, USING MATERIALS AS RECOMMENDED BY THE PULLBOX MANUFACTURER.
5. LOGO FOR TOP SHALL BE "BRANFORD LIGHTING" OR "BRANFORD TRAFFIC" AS APPROPRIATE IN 2" HIGH LETTERS. PROVIDE A FULL SIZE SAMPLE FOR REVIEW.

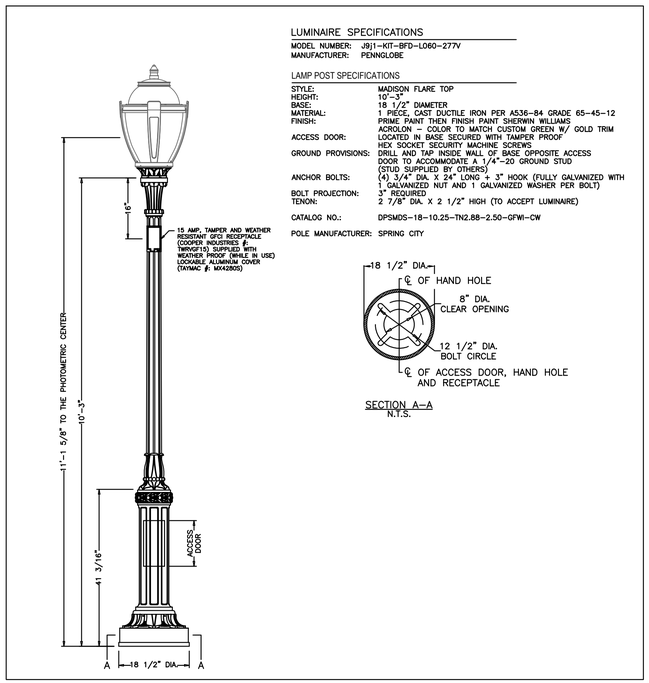

LUMINAIRE SPECIFICATIONS

MODEL NUMBER: J9J1-KIT-BFD-LO60-277V
MANUFACTURER: PENNGLOBE

LAMP POST SPECIFICATIONS

STYLE:	MADISON FLARE TOP
HEIGHT:	10'-3"
BASE:	18 1/2" DIAMETER
MATERIAL:	1 PIECE, CAST DUCTILE IRON PER A536-84 GRADE 65-45-12
FINISH:	PRIME PAINT THEN FINISH PAINT SHERWIN WILLIAMS ACRYLON – COLOR TO MATCH CUSTOM GREEN W/ GOLD TRIM
ACCESS DOOR:	LOCATED IN BASE SECURED WITH TAMPER PROOF HEX SOCKET SECURITY MACHINE SCREWS
GROUND PROVISIONS:	DRILL AND TAP INSIDE WALL OF BASE OPPOSITE ACCESS DOOR TO ACCOMMODATE A 1/4"-20 GROUND STUD (STUD SUPPLIED BY OTHERS)
ANCHOR BOLTS:	(4) 3/4" DIA. X 24" LONG + 3" HOOK (FULLY GALVANIZED WITH 1 GALVANIZED NUT AND 1 GALVANIZED WASHER PER BOLT)
BOLT PROJECTION:	3" REQUIRED
TENON:	2 7/8" DIA. X 2 1/2" HIGH (TO ACCEPT LUMINAIRE)
CATALOG NO.:	DPSMDS-18-10.25-TN2.88-2.50-GFWI-CW
POLE MANUFACTURER:	SPRING CITY

SECTION A-A
N.T.S.

CALL BEFORE YOU DIG
1-800-922-4455 OR 811
CALL NO LESS THAN TWO FULL WORKING DAYS AND NO MORE THAN 30 DAYS PRIOR TO START OF EXCAVATION MONDAY THRU FRIDAY, 7AM TO 5PM

Project:
TOWN OF BRANFORD
MAIN STREET RECONSTRUCTION AND REHABILITATION
PROJECT NO.: L014-0002
1019 MAIN STREET
BRANFORD, CT 06405

Weston & Sampson
Weston & Sampson Engineers, Inc.
712 Brook Street, Suite 103
Rocky Hill, CT 06067
860.513.1473 800.SAMPSON
www.westonandsampson.com

Consultants:
SILVER PETRUCELLI + ASSOCIATES
3190 WHITNEY AVENUE HAMDEN CT 06518
311 STATE STREET NEW LONDON CT 06320
203 230 9007 silverpetrucelli.com

Revisions:

No.	Date	Description

Seal:

COA:
COPYRIGHT © 2019 BY WESTON & SAMPSON
THIS DRAWING HAS BEEN PREPARED FOR THE EXCLUSIVE USE OF THE CLIENT & PROJECT NAME LISTED ON THIS DRAWING ONLY.
REPRODUCTION, RELEASE OF UTILIZATION OF THE DRAWING CONTENT BY OTHER CLIENTS / FIRMS AND ON OTHER PROJECTS IS PROHIBITED BY LAW.
WESTON & SAMPSON RETAINS THE EXCLUSIVE USE OF THE INTELLECTUAL PROPERTY CONTAINED HEREIN.

Issued For:
BID SET

Scale:	AS NOTED
Date:	DECEMBER 13, 2024
Drawn By:	DJR
Reviewed By:	RRB
Approved By:	RRB
W&S Project No.:	ENG21-0163
W&S File No.:	

Drawing Title:
ELECTRICAL DETAILS

Sheet Number:
EL-5

COPYRIGHT 2019 WESTON & SAMPSON